Middle Power LED
2835

282D Solar Spectrum Series
RA98

For Horticulture Lighting



LED植物光源魔法师

Features & Benefits

- 0.5 W class middle power LED
- Mold resin for high reliability
- Standard form factor for design flexibility (2.8 × 3.5 mm)

≠ Radiant Efficiency @60mA: typ.52.5%

≠ The Highest PPE @60mA: 2.4umol/s/w



立德达 ledestar

Table of Contents

1.	Characteristics	----------	3
2.	Product Code Information	----------	4
3.	Typical Characteristics Graphs	----------	8
4.	Outline Drawing & Dimension	----------	10
5.	Reliability Test Items & Conditions	----------	11
6.	Soldering Conditions	----------	12
7.	Tape & Reel	----------	13
8.	Label Structure	----------	15
9.	Packing Structure	----------	16
10.	Precautions in Handling & Use	----------	18

1. Characteristics

a) Absolute Maximum Rating

Item	Symbol	Rating	Unit	Condition
Ambient / Operating Temperature	T_a	-40 ~ +85	℃	-
Storage Temperature	T_{stg}	-40 ~ +105	℃	-
LED Junction Temperature	T_j	125	℃	-
Forward Current	I_F	150	mA	-
Pulse Forward Current	I_{FP}	300	mA	Duty 1/10, pulse width 10ms
Assembly Process Temperature	-	260 <10	℃ s	-
ESD (HBM)	-	2	kV	-

b) Electro-optical Characteristics (I_F = 60 mA, Ts = 25℃)

Item	Unit	Rank	Bin	Min.	Typ.	Max.
Forward Voltage (V_F)	V	F0	F1	2.8	-	2.9
			F2	2.9	-	3.0
Reverse Current(I_R) (@VR=5V)	uA			-	-	1
Color Rendering Index (R_a)	-			-	98	-
Photosynthetic Photon Flux(PPF)	μmol/s			0.35	-	0.45
Radiant Power	mW			85	-	95
Photosynthetic Active Radiation(PAR)	mW			85	-	95
Thermal Resistance (junction to solder point)	℃/W			-	80	-
Beam Angle	○			-	120	-

Note:

Ledstar maintains measurement tolerance of: forward voltage = ±0.1 V, luminous flux = ±5 %, CRI = ±3

2. Product Code Information

1	2	3	4	5	6	7	8	9	10	11	12	13	14	15	16	17	18	19	20	21
L	D	R	–	2	8	3	5	T	A	B	5	0	9	8	–	F	0	5	0	K	L	0

Digit	PKG Information	Code	Specification
1 2 3	Ledstar Package Middle Power	LDR	
4 5 6 7	Package Model and Size	2835	2.8 x 3.5 x 0.70mm
8	Product Category	T	Top View
9	Bractek Type	A	PPA & Cu
10	Version	B	
11 12	Nominal CCT	50	4800~5200K
13 14	RA	98	Typ. 98
15 16	Forward Voltage (V)	F0	2.8~3.0 Bin Code: F1 2.8~2.9 F2 2.9~3.0
17 18 19	Chromaticity Code	50K	4800-5200K
20 21	Luminous Flux (lm)	L0 LR LS	LR LS 22~24 24~26

a) Luminous Flux Bins(I_F = 60 mA, T_s= 25℃)

RA Typ.	Product Code	Flux Rank	Flux Bin	Flux Range (Φ_v, lm)	Radint Flux Range (Φ_e, mw)	PPE Range (umol/s/W)
98	LDR-2835TAB5098-F050KL0	L0	LR	22.0~24.0	85~95	2.20~2.40
			LS	24.0~26.0	85~95	2.30~2.50

b) Color Bins (I_F = 60 mA, Ts= 25℃)

RA Typ.	Product Code	CCT Range (K)	Chromaticity Bin
98	LDR-2835TAB5098-F050KL0	4800 ~ 5200	50K

c) Voltage Bins (I_F = 60 mA, T_s = 25℃)

RA Typ.	Product Code	Voltage Rank	Voltage Bin	Voltage Range (V)
98	LDR-2835TAB5098-F050KL0	F0	F1	2.8 ~ 2.9
			F2	2.9 ~ 3.0

d) Chromaticity Region & Coordinates (I_F = 60 mA, T_s = 25℃)

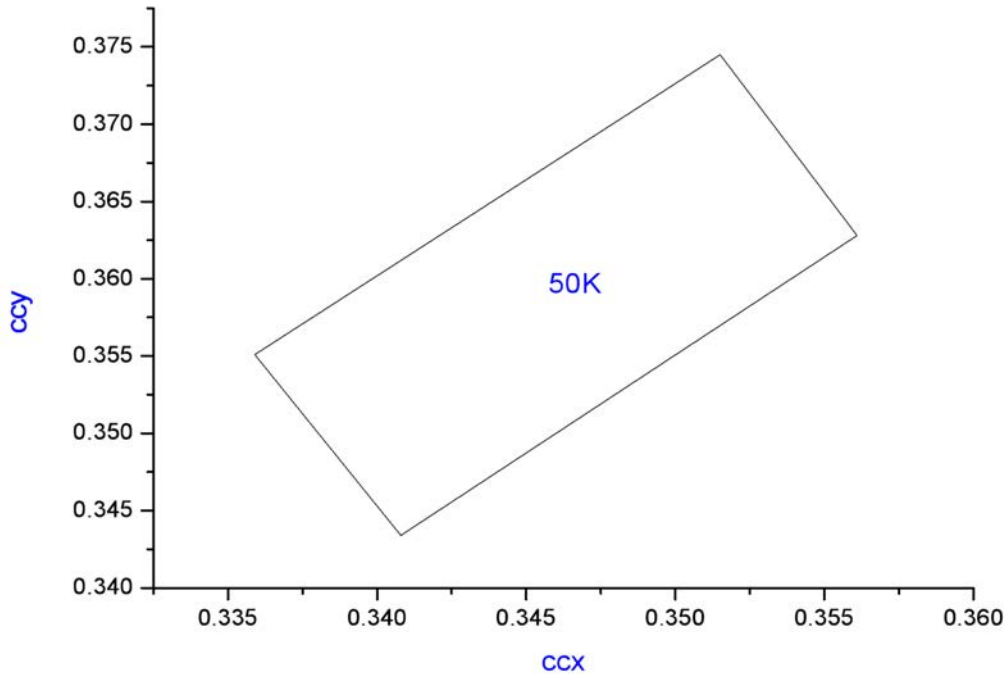

e) Chromaticity Region & Coordinates (I_F = 60 mA, T_s = 25℃)

CCT	CIE-X	CIE-Y	BIN
4800-5200K	0.3359	0.3551	50K
	0.3515	0.3745	
	0.3561	0.3628	
	0.3408	0.3434	

Note:

Ledstar maintains measurement tolerance of: Cx, Cy = ±0.005

3. Typical Characteristics Graphs

a) Spectrum Distribution (I_F = 60 mA, T_s = 25℃)

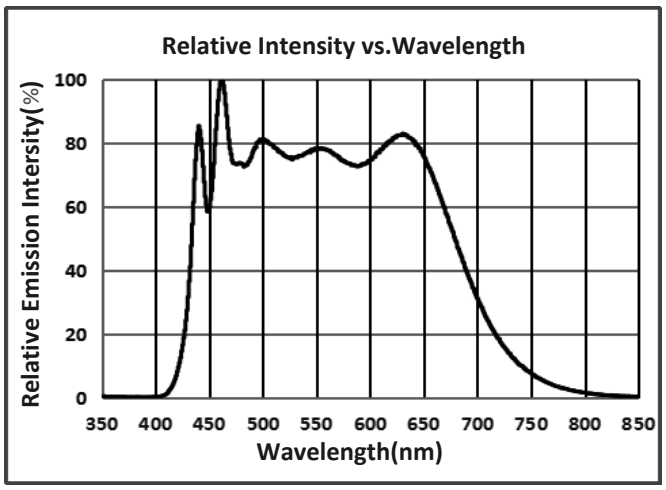

b) Temperature Characteristics (I_F = 60 mA)

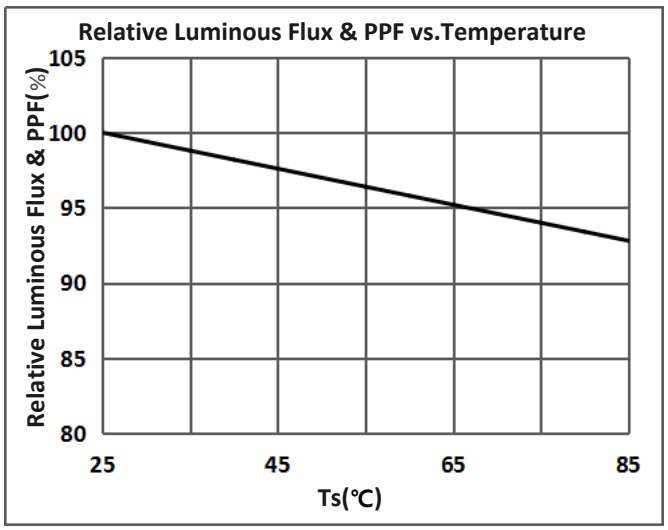

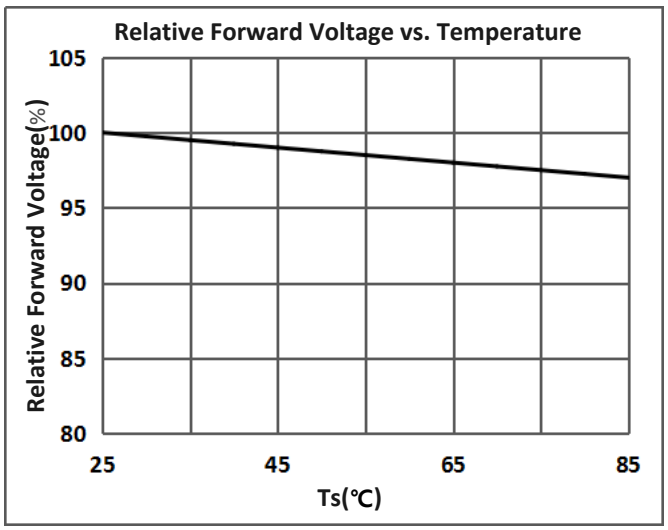

c) Forward Current Characteristics (T_s = 25℃)

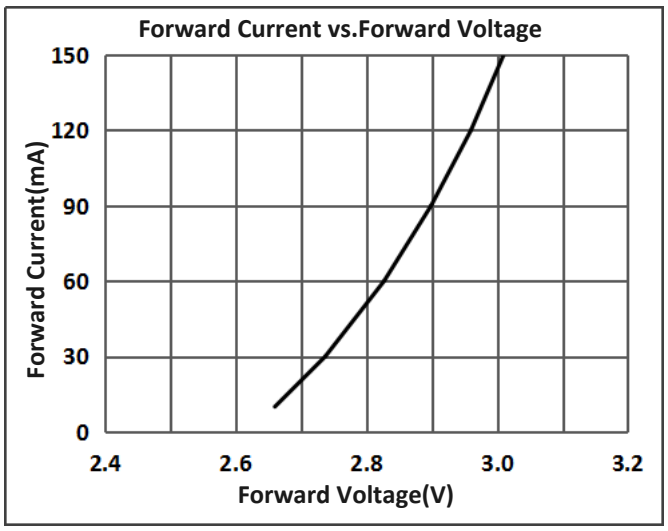

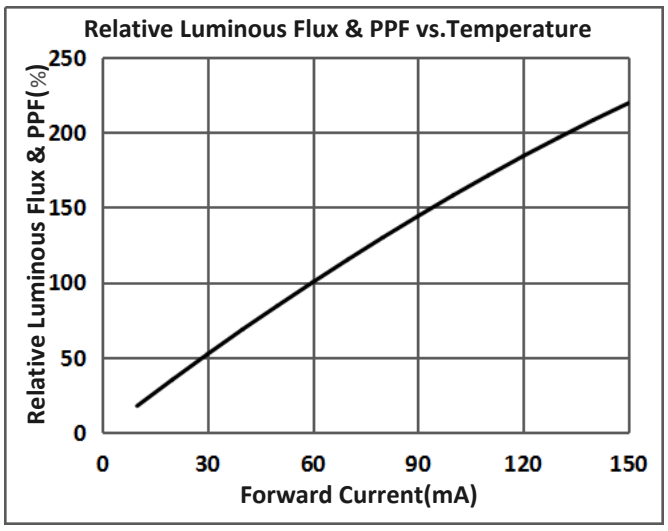

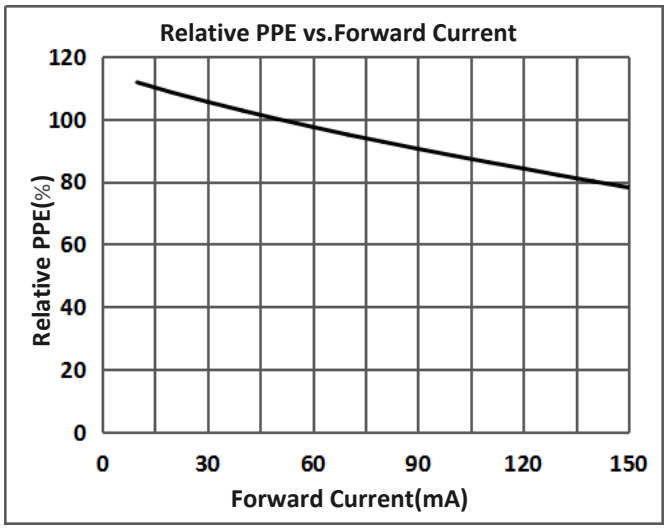

d) Color Shift Characteristics, T_s = 25℃

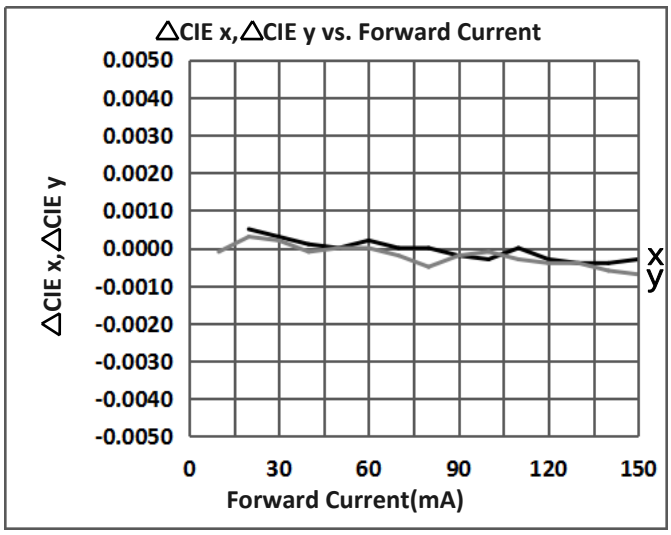

e) Derating Curve

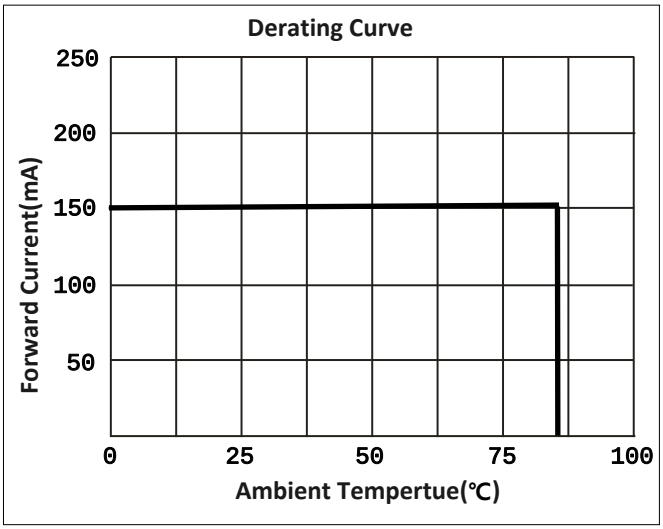

f) Beam Angle Characteristics (T_s = 25℃, I_F = 60 mA)

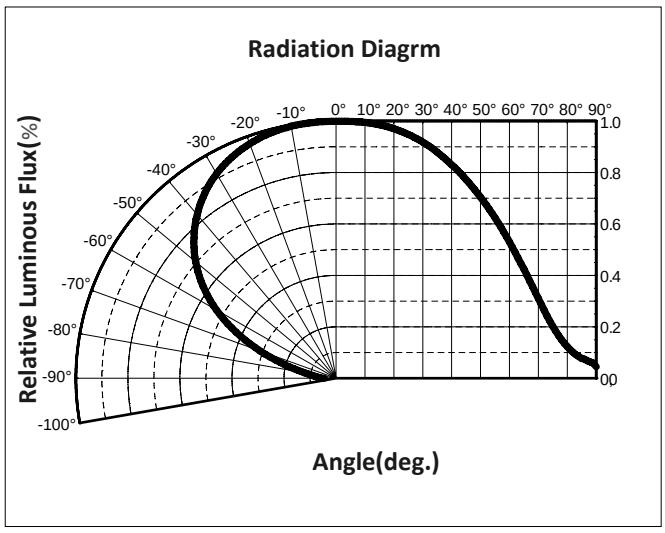

4. Outline Drawing & Dimension

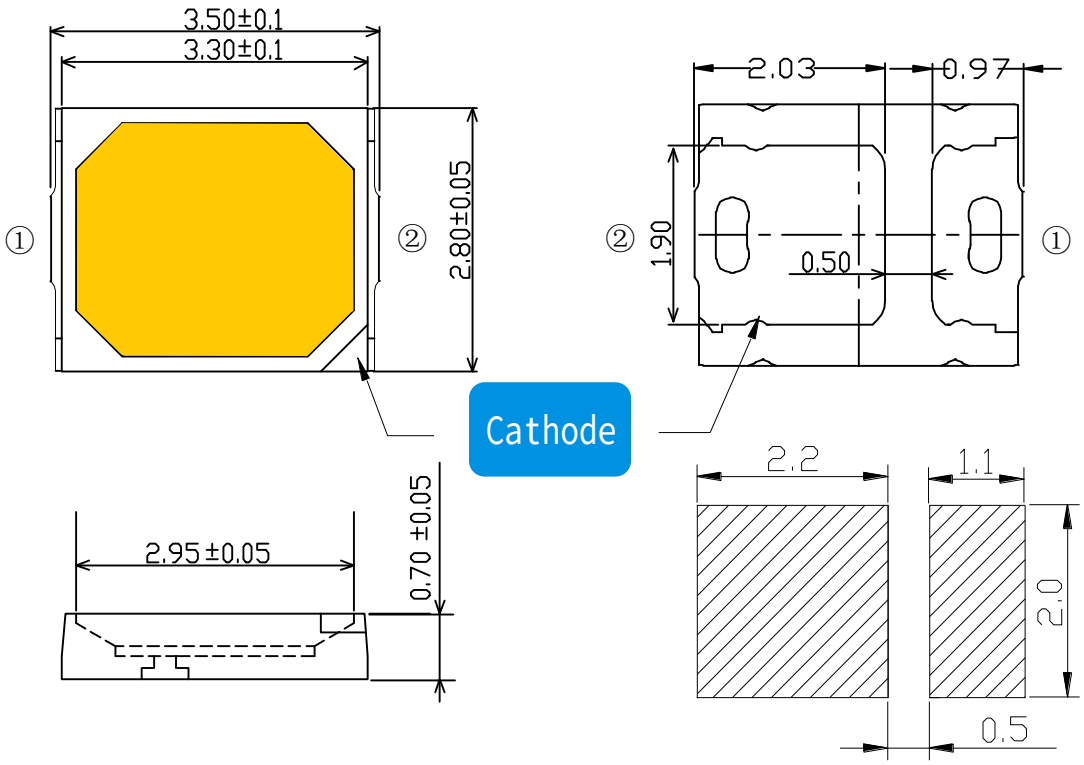

Recommended Soldering Pad

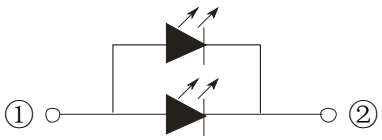

Polarity

Notes:

T_s point and measurement method:

① Measure one point at the cathode pad, if necessary remove PSR of PCB to reach T_s point.

② All pads must be soldered to the PCB to dissipate heat properly, otherwise the LED can be damaged.

③ All dimensions in mm. Tolerances unless mentioned is ±0.1mm.

Precautions:

1) Pressure on the LEDs will influence to the reliability of the LEDs. Precautions should be taken to avoid strong pressure on the LEDs. Do not put stress on the LEDs during heating.

2) Re-soldering should not be done after the LEDs have been soldered. If re-soldering is unavoidable, LED`s characteristics should be carefully checked before and after such repair.

3) Do not stack assembled PCBs together. Since materials of LEDs is soft, abrasion between two PCB assembled with LED might cause catastrophic failure of the LEDs.

5. Reliability Test Items & Conditions

a) Test Items

Test Item	Test Condition	Test Hour / Cycle	Sample No.
Room Temperature Life Test	25℃, DC 150 mA	1000 h	22
High Temperature Life Test	85℃, DC 150 mA	1000 h	22
High Temperature Humidity Life Test	85℃, 85 % RH, DC 150 mA	1000 h	22
Low Temperature Life Test	-40℃, DC 150 mA	1000 h	22
Powered Temperature Cycle Test	-40 ℃ ~ 85℃, each 10 min, On/Off 5min , Temp. Change Time 20min, DC 150 mA	100 cycles	22
Thermal Cycle	-40℃ / 15 min ↔ 105℃ / 15 min → Hot plate 180℃	100 cycles	100
High Temperature Storage	105℃	1000 h	22
Low Temperature Storage	-40℃	1000 h	22

b) Criteria for Judging the Damage

Item	Symbol	Test Condition (Ts = 25℃)	Limit	
			Min	Max
Forward Voltage	V_F	I_F = 150 mA	Init. Value * 0.9	Init. Value * 1.1
Luminous Flux	Φ_v	I_F = 150 mA	Init. Value * 0.7	Init. Value * 1.1

6. Soldering Conditions

a) Reflow Conditions (Pb free)

Reflow frequency: 2 times max.

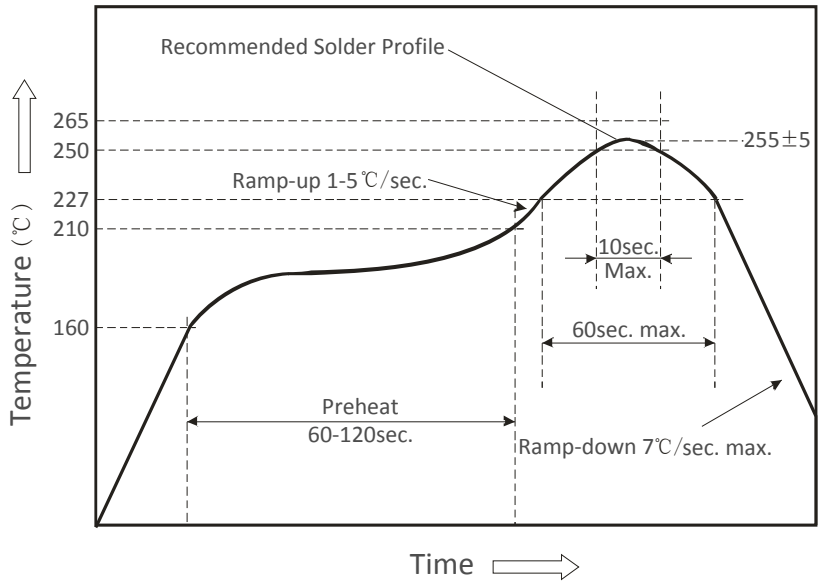

b) Manual Soldering Conditions

Not more than 5 seconds @ max. 300℃, under soldering iron.

7. Tape & Reel

a) Taping Dimension

(unit: mm)

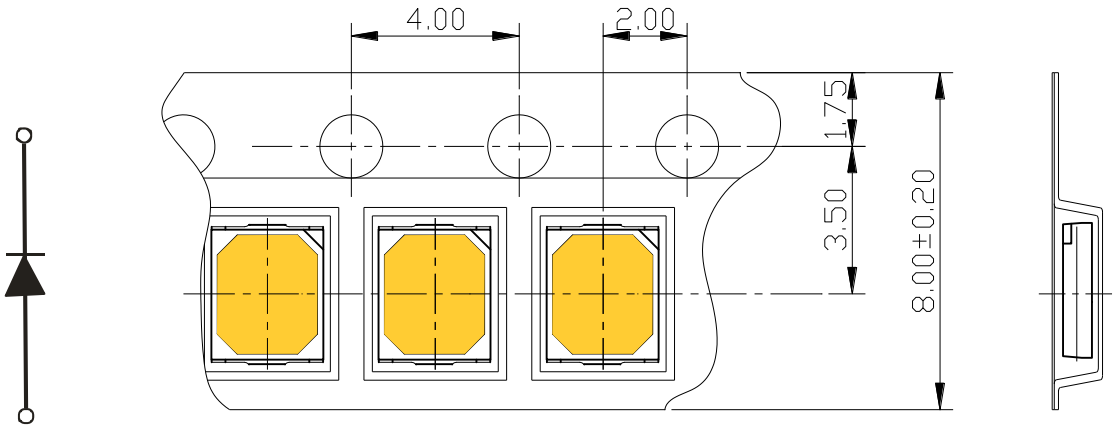

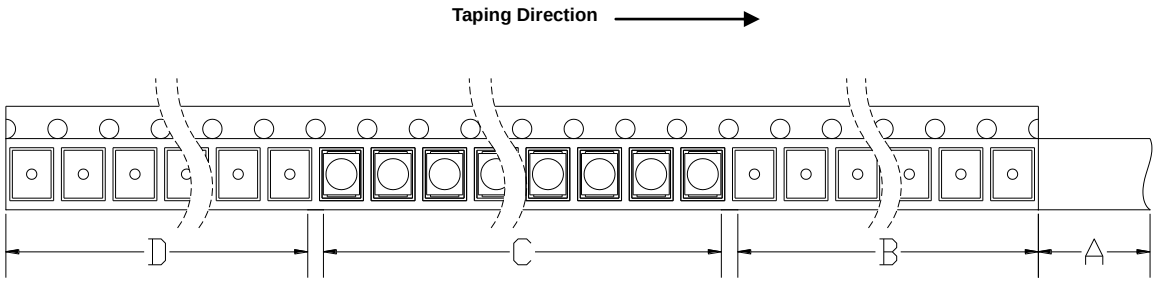

A: Top Cover Tape, 300mm; B: Leader, Empty, 200mm; C: 5000 Lamps Loaded; D: Trailer, Empty, 200mm.

b) Reel Dimension

(unit: mm)

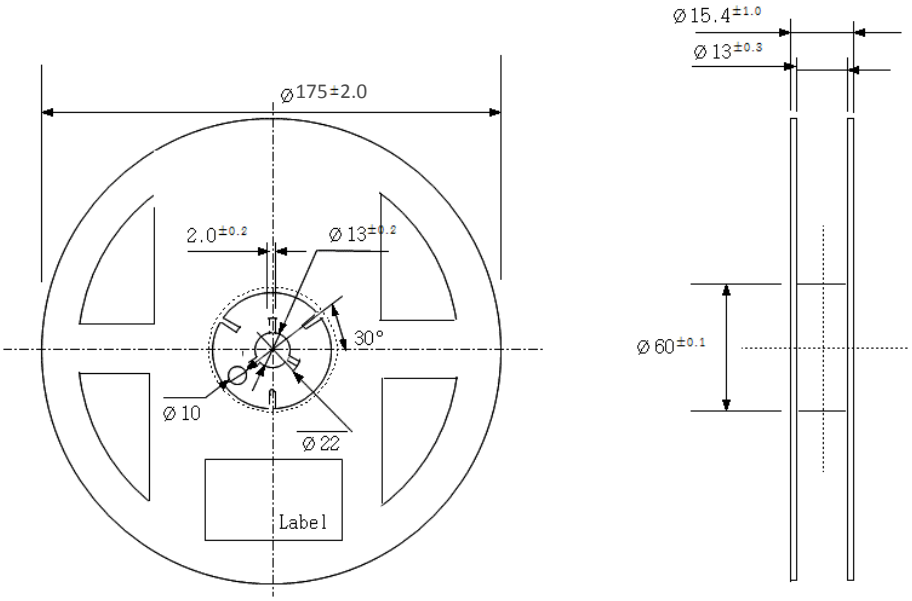

Notes:

1) Quantity: The quantity/reel is 5,000 pcs
2) Cumulative Tolerance: Cumulative tolerance / 10 pitches is ±0.2 mm
3) Adhesion Strength of Cover Tape: Adhesion strength is 0.1-0.7 N when the cover tape is turned off from the carrier tape at 10° angle to the carrier tape
4) Packaging: P/N, Manufacturing data code no. and quantity are indicated on the aluminum packing bag

8. Label Structure

a) Label Structure



Note: Denoted bin code and product code above is only an example (see description on page 5)

b) Label Explannation

Part No.:Product Code

IF:Testing Current

Bin Code:Rank

VF:Forward Voltage Range

C/N:Internal Identification Code

Flux:Luminous Flux Range

Remark:Special Remark

PPE:Photosynthesis Photons Flux Efficiency Range

QTY:Quantity

Date:Packing Date

Lot No.:Production batch Number

9. Packing Structure

a) Packing Process (The quantity of PKG on the Reel to be Max 5,000pcs)

Reel

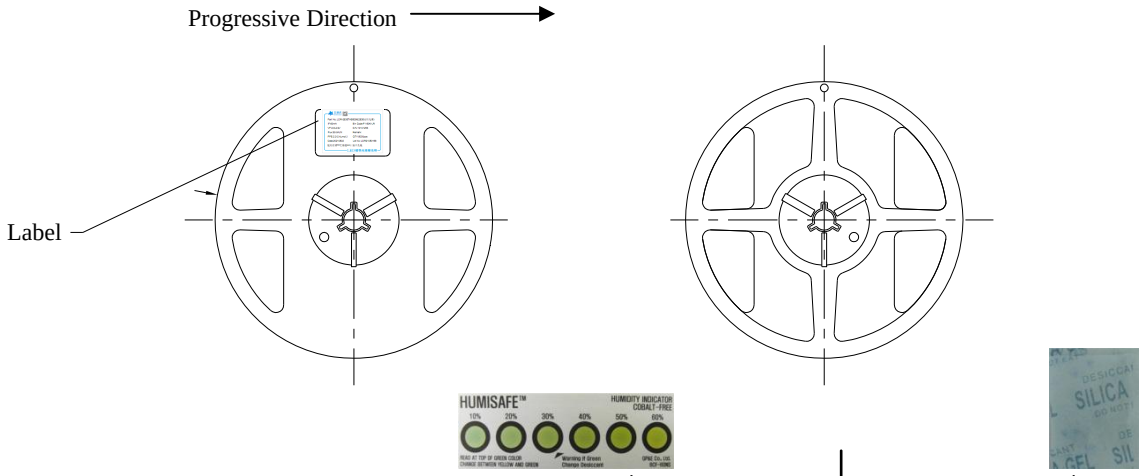

Aluminum Vinyl Packing Bag

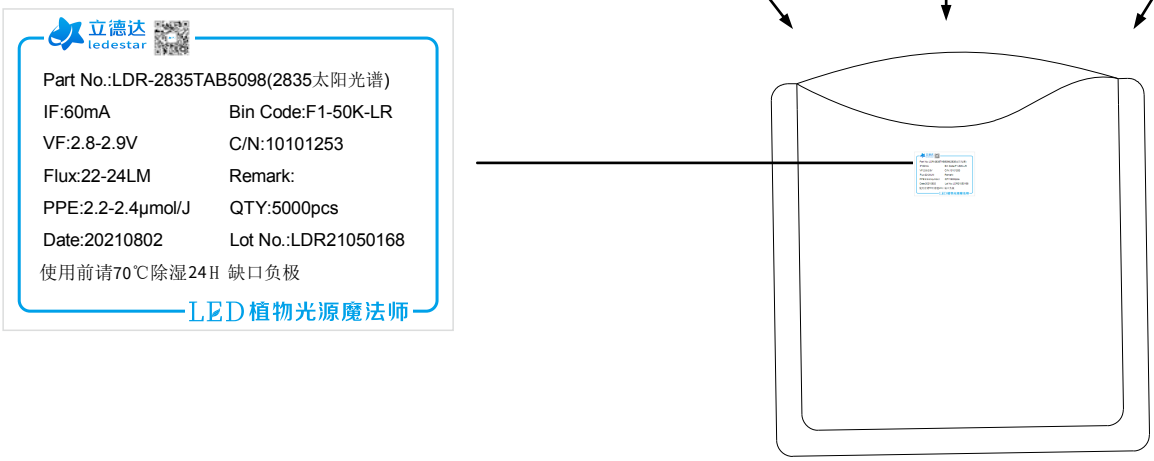

Outer Box

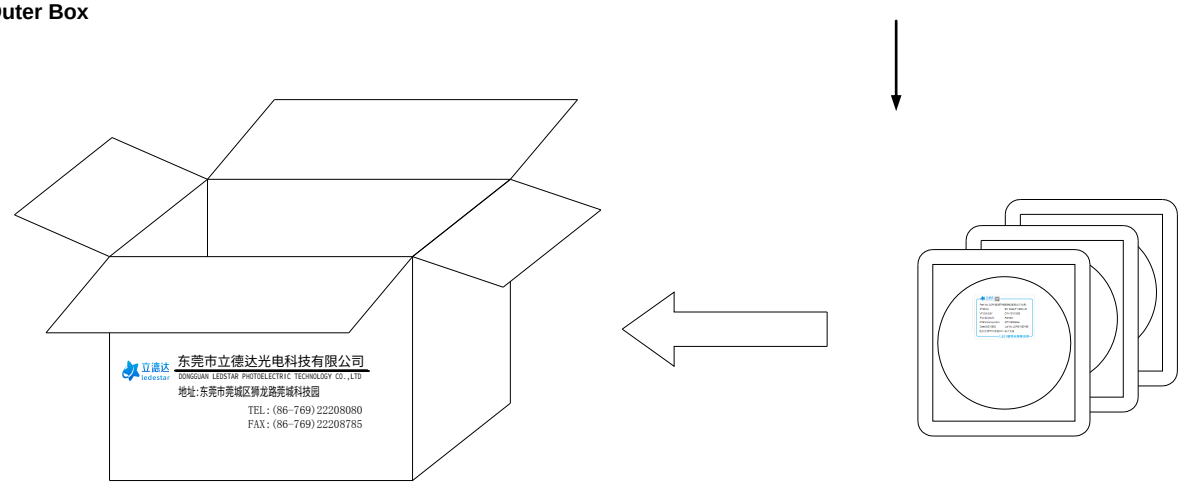

b) Aluminum Vinyl Packing Bag



c) Silica Gel & Humidity Indicator Card inside Aluminum Vinyl Bag



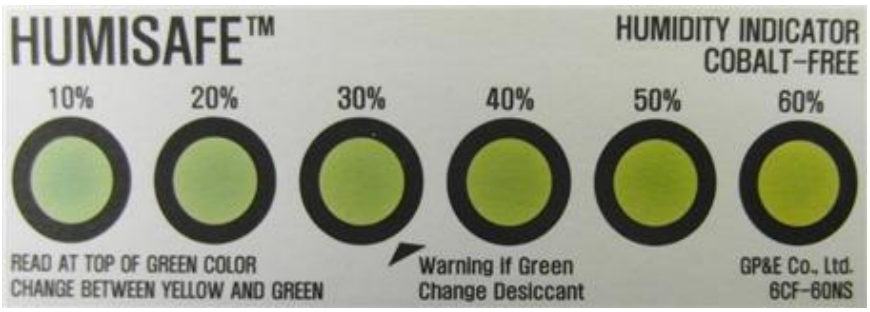

10. Precautions in Handling & Use

1) For over-current protection, users are recommended to apply resistors connected in series with the LEDs to mitigate sudden change of the forward current caused by shift of forward voltage.

2) This device should not be used in any type of fluid such as water, oil, organic solvent, etc. When cleaning is required, IPA is recommended as the cleaning agent. Some solvent-based cleaning agent may damage the silicone resins used in the device.

3) When the device is in operation, the forward current should be carefully determined considering the maximum ambient temperature and corresponding junction temperature.

4) LEDs must be stored in a clean environment. If the LEDs are to be stored for three months or more after being shipped from Ledstar, they should be packed with a nitrogen-filled container (shelf life of sealed bags is 12 months at temperature 0~40 ºC, 0~90 % RH).

5) After storage bag is opened, device subjected to soldering, solder reflow, or other high temperature processes must be:
a. Mounted within 672 hours (28 days) at an assembly line with a condition of no more than 30 ºC / 60 % RH*[Note 1], or
b. Mounted within 24 hours (1 day) at an assembly line with a condition of more than 30 ºC / 70 % RH*[Note 2], or
c. Stored at <10 % RH.

*Note 1, 2: IPC/JEDEC J-STD-033A, Recommended Equivalent Total Floor Life Table

Package Type and Body Thickness	Moisture Sensitivity Level	Maximum Percent Relative Humidity						Temperature
		40%	50%	60%	70%	80%	90%	
Body Thickness <2.1mm	Level 2a	∞	∞	28	1	1	1	30℃
		∞	∞	∞	2	1	1	25℃
		∞	∞	∞	2	2	1	20℃

6) Repack unused devices with anti-moisture packing, fold to close any opening and then store in a dry place.

7) Devices require baking before mounting, if humidity card reading is >60 % at 23 ± 5 ºC.

8) Devices must be baked for 10~24 hours at 70 ± 5 ºC, if baking is required.

9) The LEDs are sensitive to the static electricity and surge current. It is recommended to use a wrist band or anti-electrostatic glove when handling the LEDs. If voltage exceeding the absolute maximum rating is applied to LEDs, it may cause damage or even destruction to LED devices. Damaged LEDs may show some unusual characteristics such as increase in leakage current, lowered turn-on voltage, or abnormal lighting of LEDs at low current.

10) VOCs (Volatile Organic Compounds) can be generated from adhesives, flux, hardener or organic additives used in luminaires (fixtures). Transparent LED silicone encapsulant is permeable to those chemicals and they may lead to a discoloration of encapsulant when they exposed to heat or light. This phenomenon can cause a significant loss of light emitted (output) from the luminaires. In order to prevent these problems, we recommend users to know the physical properties of materials used in luminaires and they must be carefully selected.

11) Risk of sulfurization (or tarnishing)
The LED from Ledstar uses a silver-plated lead frame and its surface color may change to black (or dark colored) when it is exposed to sulfur (S), chlorine (Cl) or other halogen compound. Sulfurization of lead frame may cause intensity degradation, change of chromaticity coordinates and, in extreme cases, open circuit. It requires caution. Due to possible sulfurization of lead frame, LED should not be used and stored together with oxidizing substances made of materials such as rubber, plain paper, lead solder cream, etc.