Cree® J Series™ 2835 Value LEDs

PRODUCT DESCRIPTION

J Series™ LEDs extend Cree's industry-leading portfolio of lighting-class LEDs to a broader set of applications. The J Series 2835 Value LED combines high quality and excellent value in a reliable PCT package. The J Series 2835 Value LED is optimized for low-density lighting applications where high efficiency and smooth appearance are critical, such as replacement lamps, downlights, troffers, and panel lights.

FEATURES

- Industry-compatible size : 2.8 x 3.5 x 0.7 mm
- 3-V configuration
- Flux binned at 25 °C, chromaticity binned at 85 °C
- 6500 K–2700 K ANSI CCTs available
- 70, 80 & 90 CRI available for all CCTs

PRODUCT SUMMARY

Product	Power Class	Test Temperature	Test Current	Typical Forward Voltage	4000 K, 70 CRI		3000 K, 80 CRI		Maximum Current
					Typical Flux	Typical Efficacy	Typical Flux	Typical Efficacy	
JE2835 Value	0.5 W	25 °C	150 mA	3.15 V	70.5 lm	149 LPW	65 lm	138 LPW	200 mA

J Series™ Products are sold exclusively by Cree Venture LED Company Limited ("Cree Venture"), regardless of geography. Any orders for J Series Products that are submitted to Cree, Inc. or any of its other subsidiaries will be directed to Cree Venture for acknowledgement and order fulfillment.

Copyright © 2018 Cree, Inc. All rights reserved. The information in this document is subject to change without notice. Cree® is a registered trademark and the Cree logo and J Series™ are trademarks of Cree, Inc. J Series products are marketed by Cree, Inc. for the benefit of Cree Venture LED Company Limited.

Cree, Inc.
4600 Silicon Drive
Durham, NC 27703
USA Tel: +1.919.313.5300

TABLE OF CONTENTS

Order Code & Bin Code Formats 3
Characteristics 4
Operating Limits 4
Flux Characteristics, Order Codes and Bins 5
Relative Luminous Flux vs. Current 6
Electrical Characteristics 6
Relative Chromaticity vs. Current 7
Relative Chromaticity vs. Temperature 7
Relative Spectral Power Distribution 8
Relative Luminous Flux vs. Junction Temperature 8
Typical Spatial Distribution 9
Performance Groups - Luminous Flux 9
Performance Groups - Forward Voltage 10
Performance Groups - Chromaticity 10
Reflow Soldering Characteristics 19
Notes 20
Mechanical Dimensions 22
Tape & Reel 23
Packaging 24

Copyright © 2018 Cree, Inc. All rights reserved. The information in this document is subject to change without notice. Cree® is a registered trademark and the Cree logo and J Series™ are trademarks of Cree, Inc. J Series products are marketed by Cree, Inc. for the benefit of Cree Venture LED Company Limited.

ORDER CODE & BIN CODE FORMATS

Order codes and bin codes for J Series 2835 Value LEDs are configured in the following manner:

Order Code

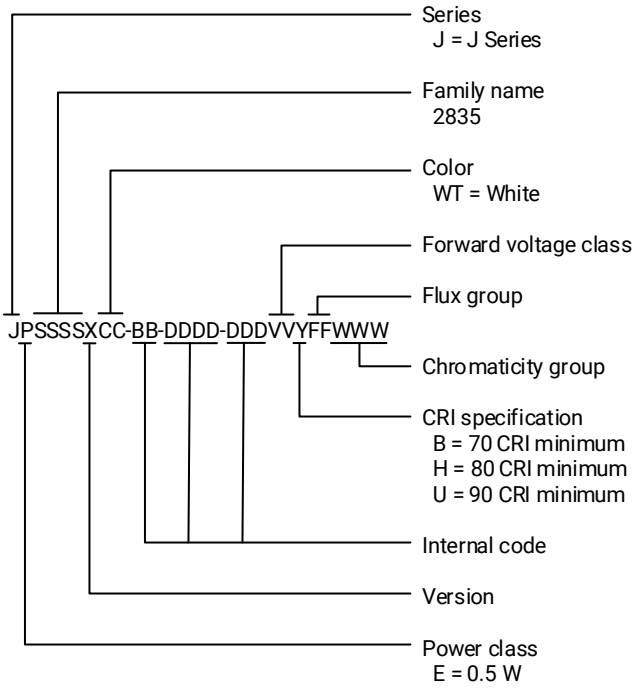

Bin Code

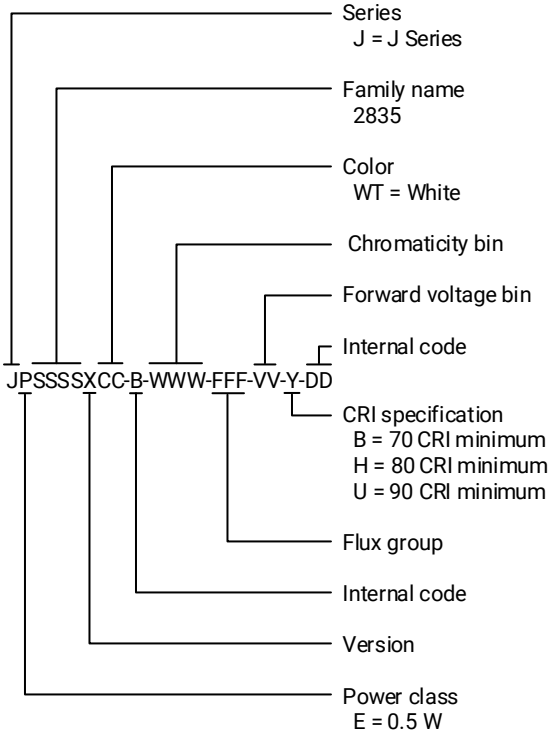

Copyright © 2018 Cree, Inc. All rights reserved. The information in this document is subject to change without notice. Cree® is a registered trademark and the Cree logo and J Series™ are trademarks of Cree, Inc. J Series products are marketed by Cree, Inc. for the benefit of Cree Venture LED Company Limited.

CHARACTERISTICS

Characteristics	Unit	Minimum	Typical	Maximum
Thermal resistance, junction to solder point	°C/W		32	
Viewing angle (FWHM)	degrees		120	
Temperature coefficient of voltage	mV/°C		-1.15	
ESD withstand voltage (JEDEC JS-001-2012)	V		Class 2	
DC forward current	mA			200
Reverse voltage	V			5
Forward voltage (@ 150 mA, 25 °C)	V		3.15	3.3
LED junction temperature	°C			125
Operating temperature	°C	-40		105

OPERATING LIMITS

The maximum forward current is determined by the thermal resistance between the LED junction and ambient.

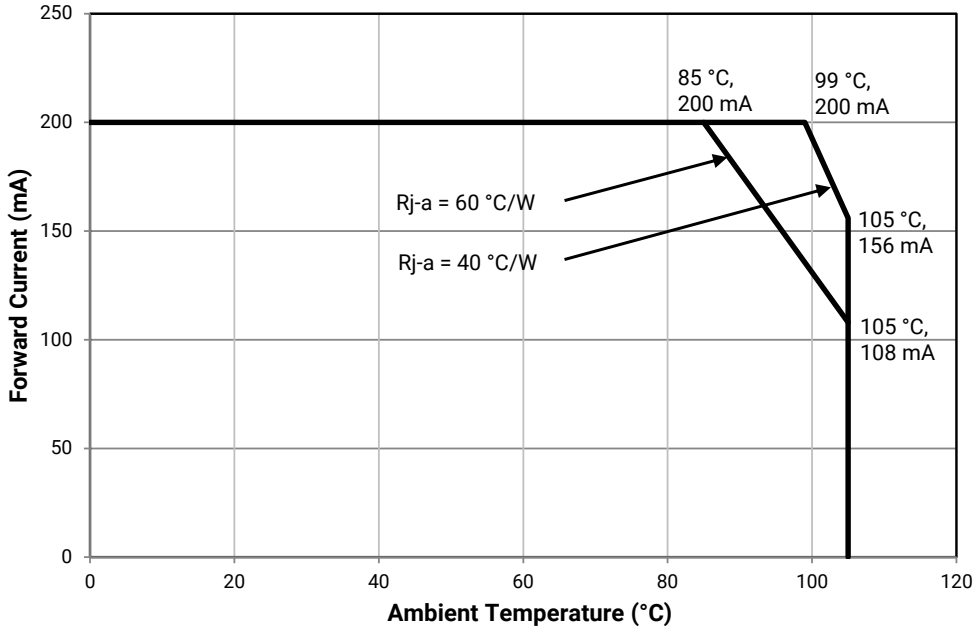

Copyright © 2018 Cree, Inc. All rights reserved. The information in this document is subject to change without notice. Cree® is a registered trademark and the Cree logo and J Series™ are trademarks of Cree, Inc. J Series products are marketed by Cree, Inc. for the benefit of Cree Venture LED Company Limited.

FLUX CHARACTERISTICS, ORDER CODES AND BINS (I_F = 150 mA, T_a = 25 °C)

The following table provides order codes for J Series 2835 Value LEDs. For a complete description of the order code nomenclature, please see the Order Code and Bin Code Formats section (page 3). For definitions of the chromaticity kits, please see the Performance Groups - Chromaticity section (page 10).

Nominal CCT	Minimum CRI	Flux Group	Minimum Flux (lm) @ 25 °C	Typical Flux (lm) @ 25 °C	Typical Flux (lm) @ 85 °C*	Order Code
6500 K	70	G8	66	70.5	60	JE2835AWT-00-0000-0B0A0BG865E
	80	G7	63	68	58	JE2835AWT-00-0000-0B0A0HG765E
	90	F8	54	58	49	JE2835AWT-00-0000-0B0A0UF865E
5700 K	70	G8	66	70.5	60	JE2835AWT-00-0000-0B0A0BG857E
	80	G7	63	68	58	JE2835AWT-00-0000-0B0A0HG757E
	90	F8	54	58	49	JE2835AWT-00-0000-0B0A0UF857E
5000 K	70	G8	66	70.5	60	JE2835AWT-00-0000-0B0A0BG850E
	80	G7	63	68	58	JE2835AWT-00-0000-0B0A0HG750E
	90	F8	54	58	49	JE2835AWT-00-0000-0B0A0UF850E
4500 K	70	G8	66	70.5	60	JE2835AWT-00-0000-0B0A0BG845E
	80	G7	63	68	58	JE2835AWT-00-0000-0B0A0HG745E
	90	F8	54	58	49	JE2835AWT-00-0000-0B0A0UF845E
4000 K	70	G8	66	70.5	60	JE2835AWT-00-0000-0B0A0BG840E
	80	G7	63	68	58	JE2835AWT-00-0000-0B0A0HG740E
	90	F8	54	58	49	JE2835AWT-00-0000-0B0A0UF840E
3500 K	70	G7	63	68.5	58	JE2835AWT-00-0000-0B0A0BG735E
	80	G6	60	66	56	JE2835AWT-00-0000-0B0A0HG635E
	90	F7	51	56.5	48	JE2835AWT-00-0000-0B0A0UF735E
3000 K	70	G7	63	67	57	JE2835AWT-00-0000-0B0A0BG730E
	80	G6	60	65	55	JE2835AWT-00-0000-0B0A0HG630E
	90	F7	51	55	47	JE2835AWT-00-0000-0B0A0UF730E
2700 K	70	G6	60	64	55	JE2835AWT-00-0000-0B0A0BG627E
	80	F9	57	62	53	JE2835AWT-00-0000-0B0A0HF927E
	90	F6	48	52.5	45	JE2835AWT-00-0000-0B0A0UF627E

Notes:

- Cree Venture maintains a tolerance of ±7% on flux and power measurements, ±0.005 on chromaticity (CCx, CCy) measurements and ±2 on CRI measurements. See the Measurements section (page 20).
- Cree Venture J Series 2835 Value LED order codes specify only a minimum flux bin and not a maximum. Cree Venture may ship reels in flux bins higher than the minimum specified by the order code without advance notice. Shipments will always adhere to the chromaticity restrictions specified by the order code.

* Flux values @ 85 °C are calculated and for reference only.

Copyright © 2018 Cree, Inc. All rights reserved. The information in this document is subject to change without notice. Cree® is a registered trademark and the Cree logo and J Series™ are trademarks of Cree, Inc. J Series products are marketed by Cree, Inc. for the benefit of Cree Venture LED Company Limited.

RELATIVE LUMINOUS FLUX VS. CURRENT

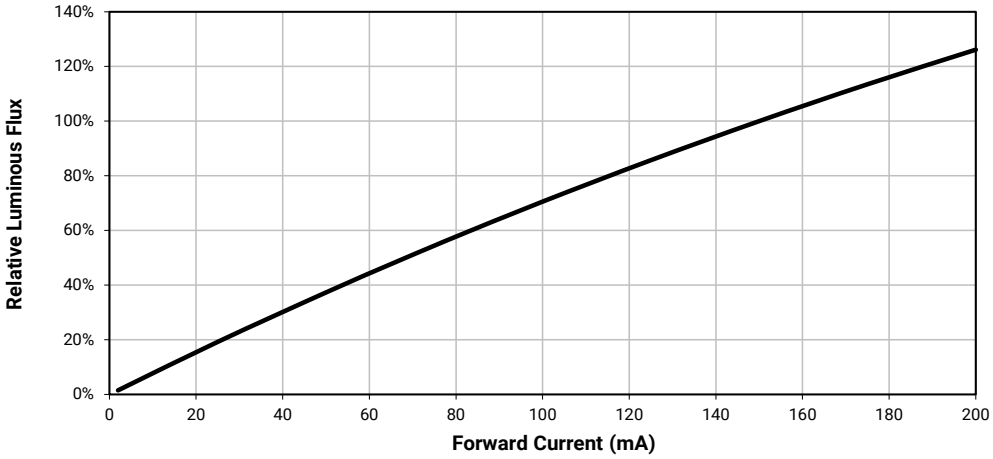

ELECTRICAL CHARACTERISTICS

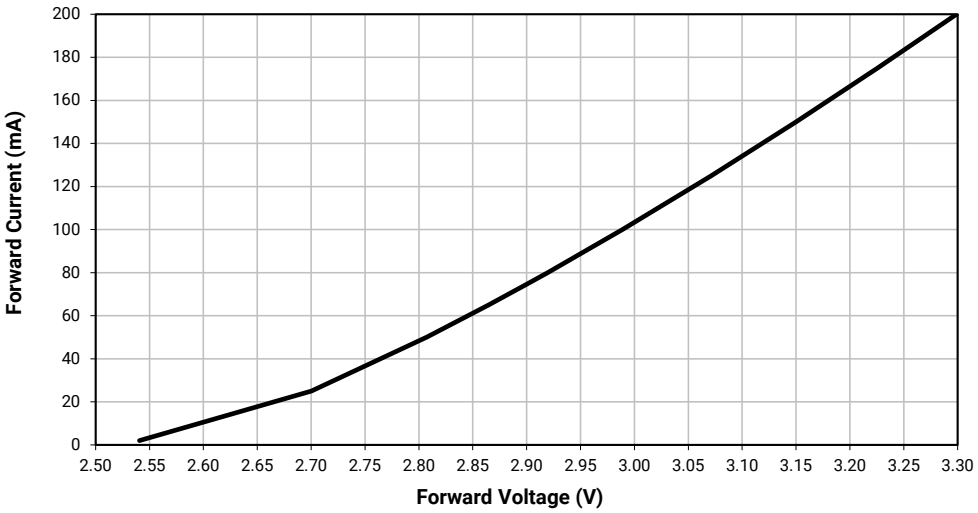

Copyright © 2018 Cree, Inc. All rights reserved. The information in this document is subject to change without notice. Cree® is a registered trademark and the Cree logo and J Series™ are trademarks of Cree, Inc. J Series products are marketed by Cree, Inc. for the benefit of Cree Venture LED Company Limited.

RELATIVE CHROMATICITY VS. CURRENT

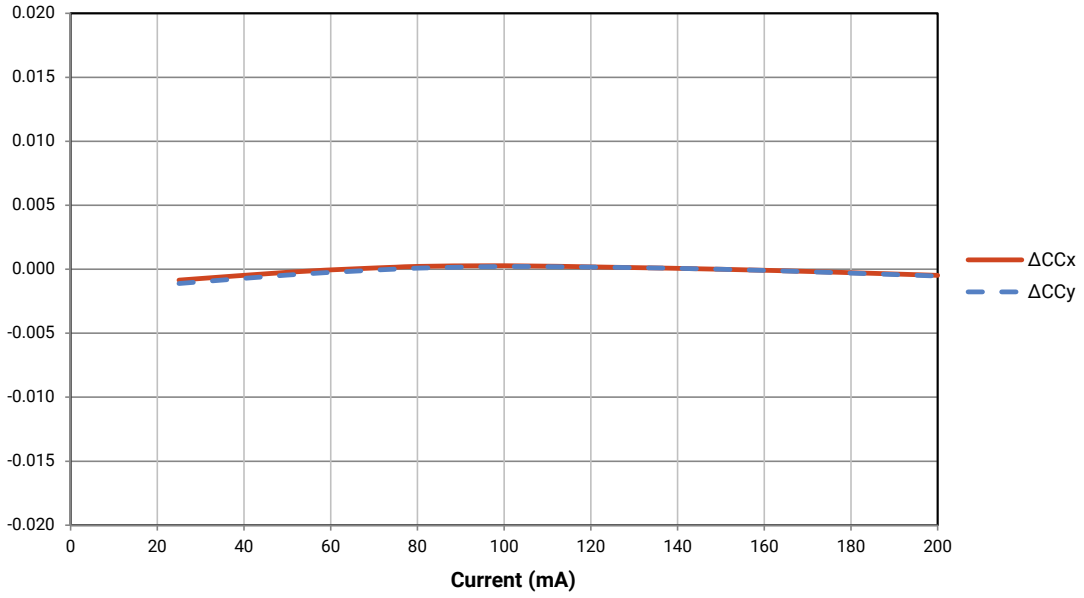

RELATIVE CHROMATICITY VS. TEMPERATURE

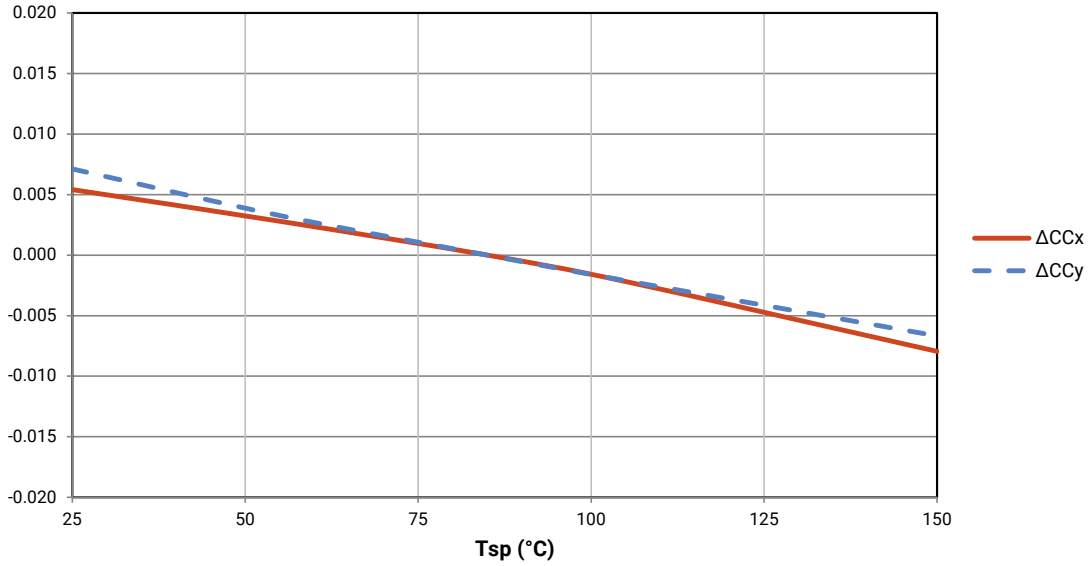

Copyright © 2018 Cree, Inc. All rights reserved. The information in this document is subject to change without notice. Cree® is a registered trademark and the Cree logo and J Series™ are trademarks of Cree, Inc. J Series products are marketed by Cree, Inc. for the benefit of Cree Venture LED Company Limited.

RELATIVE SPECTRAL POWER DISTRIBUTION

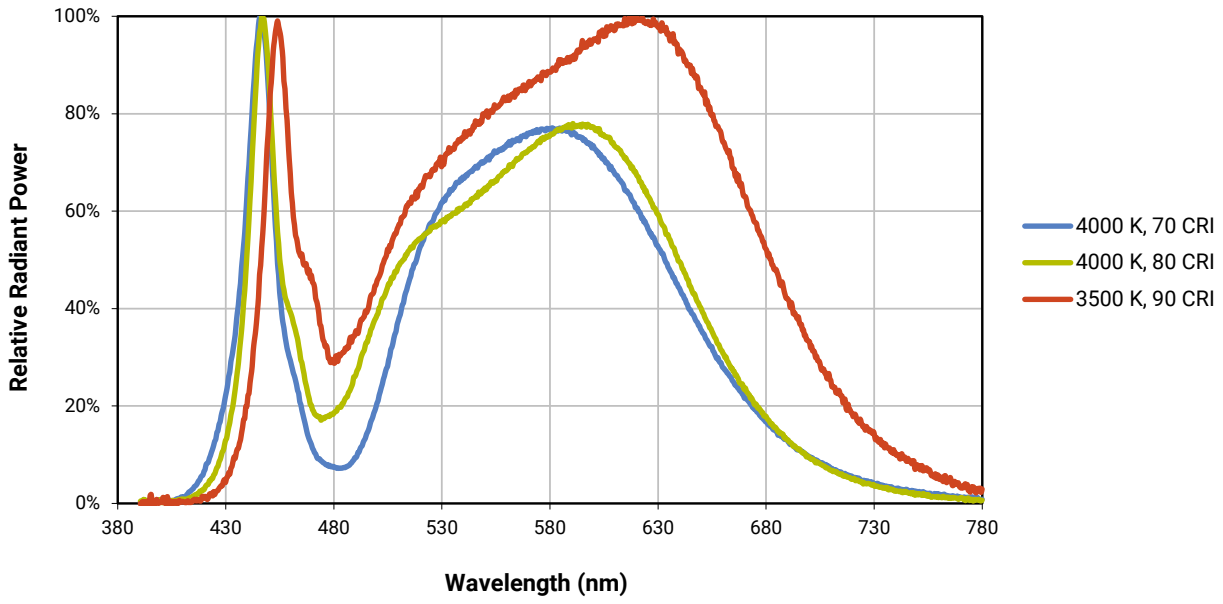

RELATIVE LUMINOUS FLUX VS. JUNCTION TEMPERATURE

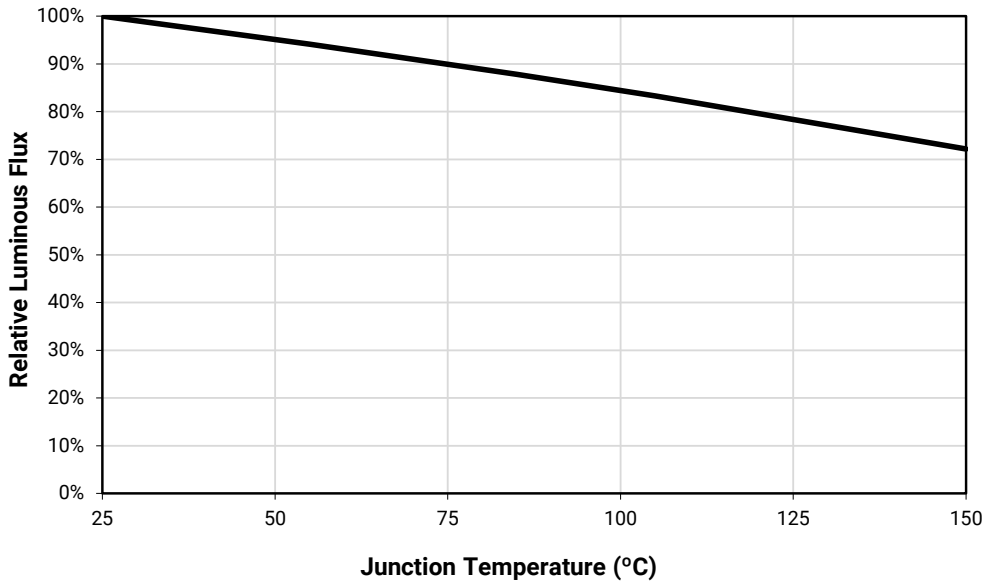

Copyright © 2018 Cree, Inc. All rights reserved. The information in this document is subject to change without notice. Cree® is a registered trademark and the Cree logo and J Series™ are trademarks of Cree, Inc. J Series products are marketed by Cree, Inc. for the benefit of Cree Venture LED Company Limited.

TYPICAL SPATIAL DISTRIBUTION

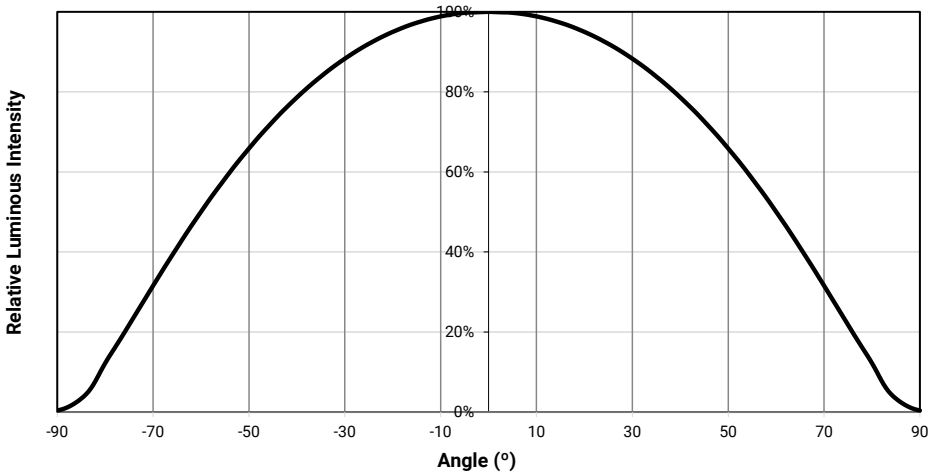

PERFORMANCE GROUPS - LUMINOUS FLUX (T_j = 25 °C)

J Series 2835 Value LEDs are tested for luminous flux at 150 mA and placed into one of the following luminous-flux groups.

Group Code	Minimum Luminous Flux (lm)	Maximum Luminous Flux (lm)
F6	48	51
F7	51	54
F8	54	57
F9	57	60
G6	60	63
G7	63	66
G8	66	69
G9	69	72
H6	72	75
H7	75	78
H8	78	81
H9	81	84
K6	84	87
K7	87	90
K8	90	93
K9	93	96

Copyright © 2018 Cree, Inc. All rights reserved. The information in this document is subject to change without notice. Cree® is a registered trademark and the Cree logo and J Series™ are trademarks of Cree, Inc. J Series products are marketed by Cree, Inc. for the benefit of Cree Venture LED Company Limited.

PERFORMANCE GROUPS - FORWARD VOLTAGE (T_a = 25 °C)

J Series 2835 Value LEDs are tested for forward voltage and placed into one of the following voltage bins.

The following voltage bins are indicated in the Forward Voltage Bin field in the bin code for 2835 Value LEDs.

Voltage Bin	Minimum Forward Voltage (V)	Maximum Forward Voltage (V)
AF	2.9	3.0
AG	3.0	3.1
AH	3.1	3.2
AJ	3.2	3.3

PERFORMANCE GROUPS - CHROMATICITY

J Series 2835 Value LEDs are tested for chromaticity and placed into one of the regions defined by the following bounding coordinates.

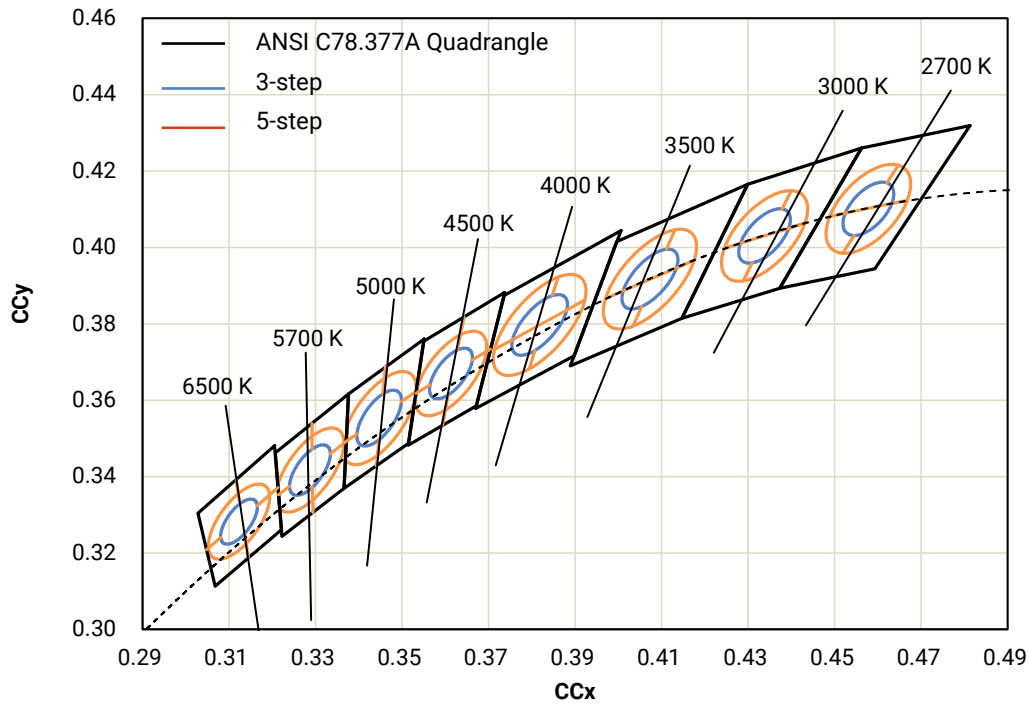

Copyright © 2018 Cree, Inc. All rights reserved. The information in this document is subject to change without notice. Cree® is a registered trademark and the Cree logo and J Series™ are trademarks of Cree, Inc. J Series products are marketed by Cree, Inc. for the benefit of Cree Venture LED Company Limited.

PERFORMANCE GROUPS - CHROMATICITY - CONTINUED

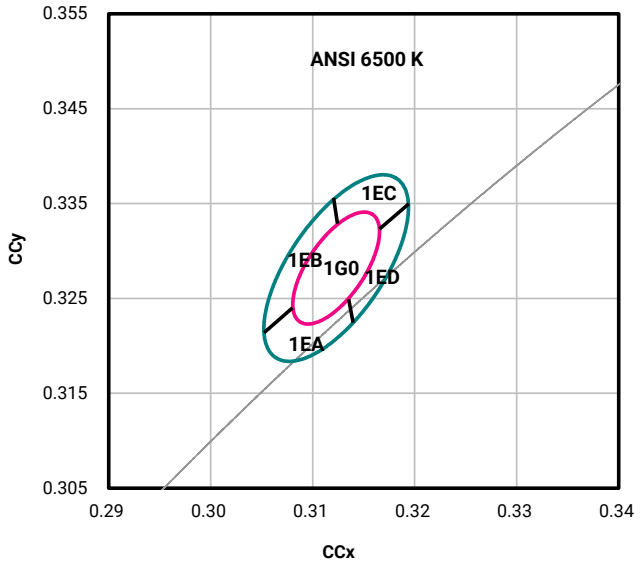

CCT	MacAdam Ellipse	Included Bins	Center Point		Major Axis	Minor Axis	Rotation Angle (°)
			x	y	a	b	
6500 K	3-step	1G0	0.3123	0.3282	0.00669	0.00285	58.57
	5-step	1G0, 1EA, 1EB, 1EC, 1ED	0.3123	0.3282	0.01115	0.00475	58.57

Copyright © 2018 Cree, Inc. All rights reserved. The information in this document is subject to change without notice. Cree® is a registered trademark and the Cree logo and J Series™ are trademarks of Cree, Inc. J Series products are marketed by Cree, Inc. for the benefit of Cree Venture LED Company Limited.

PERFORMANCE GROUPS - CHROMATICITY - CONTINUED

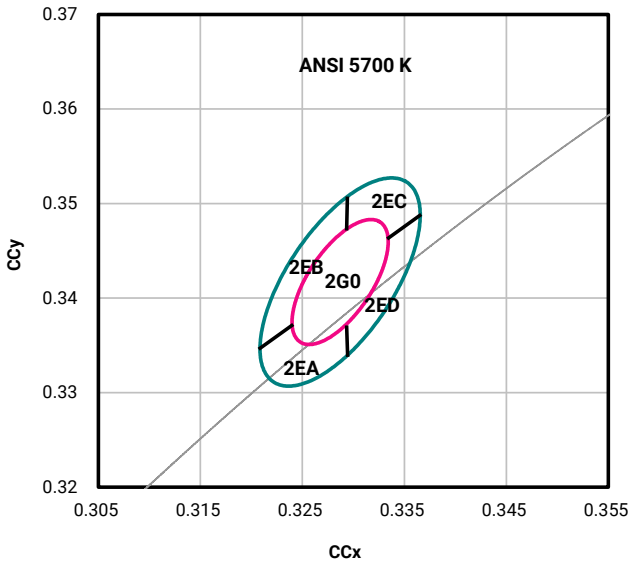

CCT	MacAdam Ellipse	Included Bins	Center Point		Major Axis	Minor Axis	Rotation Angle (°)
			x	y	a	b	
5700 K	3-step	2G0	0.3287	0.3417	0.00746	0.00320	59.09
	5-step	2G0, 2EA, 2EB, 2EC, 2ED	0.3287	0.3417	0.01243	0.00533	59.09

Copyright © 2018 Cree, Inc. All rights reserved. The information in this document is subject to change without notice. Cree® is a registered trademark and the Cree logo and J Series™ are trademarks of Cree, Inc. J Series products are marketed by Cree, Inc. for the benefit of Cree Venture LED Company Limited.

PERFORMANCE GROUPS - CHROMATICITY - CONTINUED

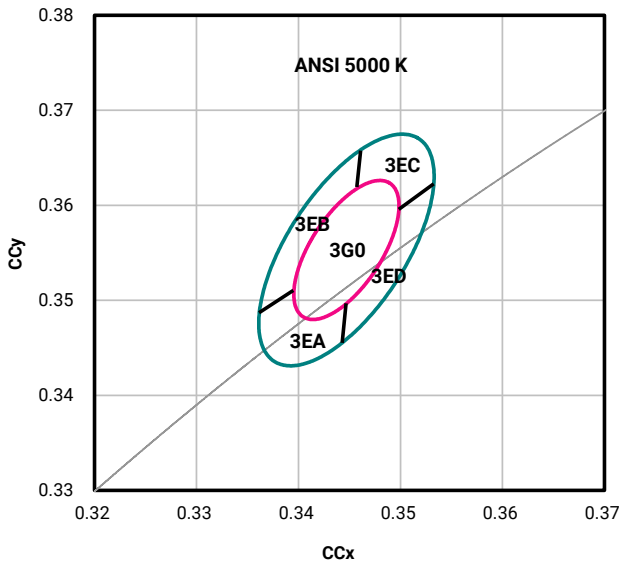

CCT	MacAdam Ellipse	Included Bins	Center Point		Major Axis	Minor Axis	Rotation Angle (°)
			x	y	a	b	
5000 K	3-step	3G0	0.3447	0.3553	0.00822	0.00354	59.62
	5-step	3G0, 3EA, 3EB, 3EC, 3ED	0.3447	0.3553	0.01370	0.00590	59.62

Copyright © 2018 Cree, Inc. All rights reserved. The information in this document is subject to change without notice. Cree® is a registered trademark and the Cree logo and J Series™ are trademarks of Cree, Inc. J Series products are marketed by Cree, Inc. for the benefit of Cree Venture LED Company Limited.

PERFORMANCE GROUPS - CHROMATICITY - CONTINUED

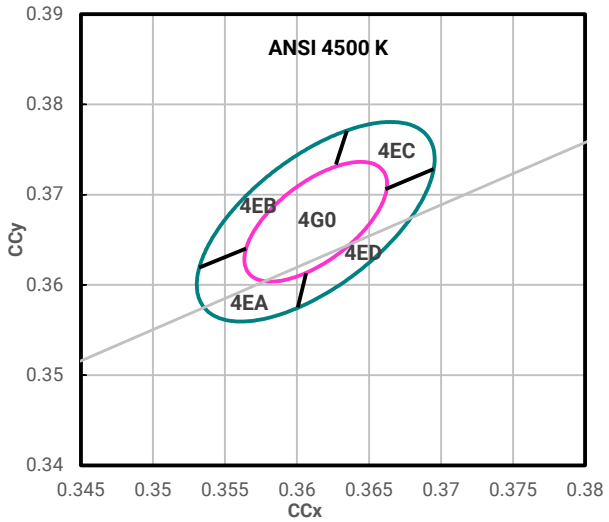

CCT	MacAdam Ellipse	Included Bins	Center Point		Major Axis	Minor Axis	Rotation Angle (°)
			x	y	a	b	
4500 K	3-step	4G0	0.3613	0.3670	0.00756	0.00338	57.58
	5-step	4G0, 4EA, 4EB, 4EC, 4ED	0.3613	0.3670	0.01260	0.00563	57.58

Copyright © 2018 Cree, Inc. All rights reserved. The information in this document is subject to change without notice. Cree® is a registered trademark and the Cree logo and J Series™ are trademarks of Cree, Inc. J Series products are marketed by Cree, Inc. for the benefit of Cree Venture LED Company Limited.

PERFORMANCE GROUPS - CHROMATICITY - CONTINUED

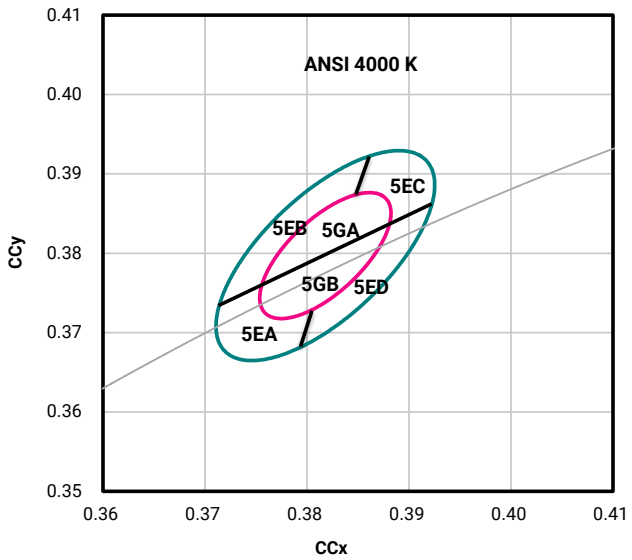

CCT	MacAdam Ellipse	Included Bins	Center Point		Major Axis	Minor Axis	Rotation Angle (°)
			x	y	a	b	
4000 K	3-step	5GA, 5GB	0.3818	0.3797	0.00939	0.00402	53.72
	5-step	5GA, 5GB, 5EA, 5EB, 5EC, 5ED	0.3818	0.3797	0.01565	0.00402	53.72

Copyright © 2018 Cree, Inc. All rights reserved. The information in this document is subject to change without notice. Cree® is a registered trademark and the Cree logo and J Series™ are trademarks of Cree, Inc. J Series products are marketed by Cree, Inc. for the benefit of Cree Venture LED Company Limited.

PERFORMANCE GROUPS - CHROMATICITY - CONTINUED

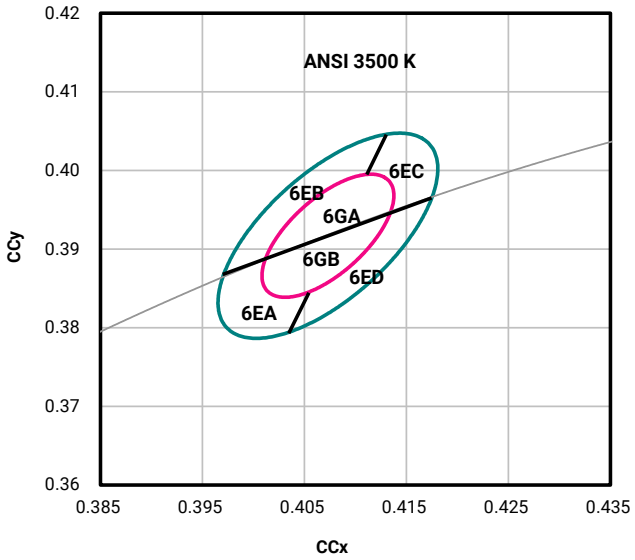

CCT	MacAdam Ellipse	Included Bins	Center Point		Major Axis	Minor Axis	Rotation Angle (°)
			x	y	a	b	
3500 K	3-step	6GA, 6GB	0.4073	0.3917	0.00927	0.00414	53.22
	5-step	6GA, 6GB, 6EA, 6EB, 6EC, 6ED	0.4073	0.3917	0.01545	0.00690	53.22

Copyright © 2018 Cree, Inc. All rights reserved. The information in this document is subject to change without notice. Cree® is a registered trademark and the Cree logo and J Series™ are trademarks of Cree, Inc. J Series products are marketed by Cree, Inc. for the benefit of Cree Venture LED Company Limited.

PERFORMANCE GROUPS - CHROMATICITY - CONTINUED

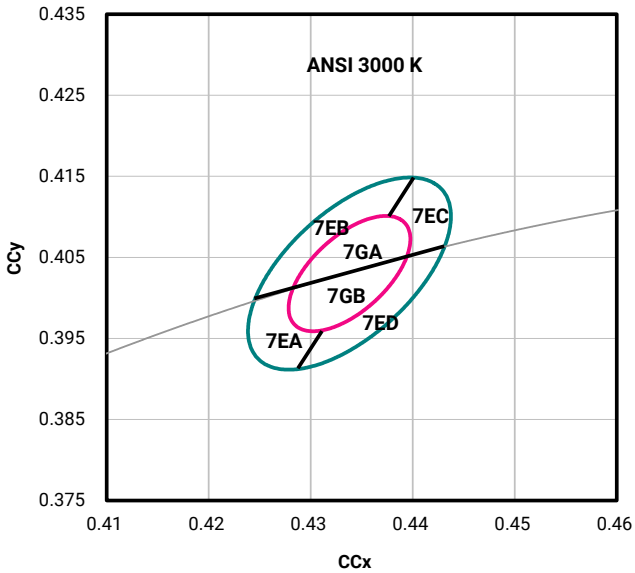

CCT	MacAdam Ellipse	Included Bins	Center Point		Major Axis	Minor Axis	Rotation Angle (°)
			x	y	a	b	
3000 K	3-step	7GA, 7GB	0.4338	0.4030	0.00834	0.00408	53.22
	5-step	7GA, 7GB, 7EA, 7EB, 7EC, 7ED	0.4338	0.4030	0.01390	0.00680	53.22

Copyright © 2018 Cree, Inc. All rights reserved. The information in this document is subject to change without notice. Cree® is a registered trademark and the Cree logo and J Series™ are trademarks of Cree, Inc. J Series products are marketed by Cree, Inc. for the benefit of Cree Venture LED Company Limited.

PERFORMANCE GROUPS - CHROMATICITY - CONTINUED

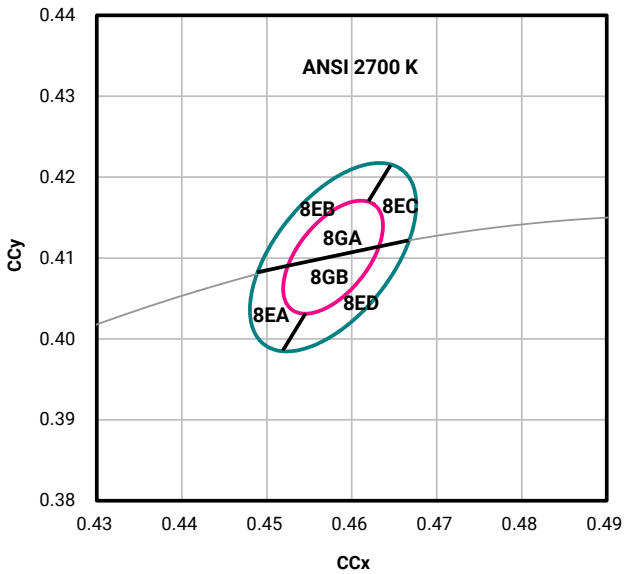

CCT	MacAdam Ellipse	Included Bins	Center Point		Major Axis	Minor Axis	Rotation Angle (°)
			x	y	a	b	
2700 K	3-step	8GA, 8GB	0.4578	0.4101	0.00810	0.00420	53.70
	5-step	8GA, 8GB, 8EA, 8EB, 8EC, 8ED	0.4578	0.4101	0.01350	0.00700	53.70

Copyright © 2018 Cree, Inc. All rights reserved. The information in this document is subject to change without notice. Cree® is a registered trademark and the Cree logo and J Series™ are trademarks of Cree, Inc. J Series products are marketed by Cree, Inc. for the benefit of Cree Venture LED Company Limited.

REFLOW SOLDERING CHARACTERISTICS

In testing, Cree Venture has found J Series 2835 Value LEDs to be compatible with JEDEC J-STD-020C, using the parameters listed below. As a general guideline, Cree Venture recommends that users follow the recommended soldering profile provided by the manufacturer of the solder paste used, and therefore it is the lamp or luminaire manufacturer's responsibility to determine applicable soldering requirements.

Note that this general guideline may not apply to all PCB designs and configurations of reflow soldering equipment.

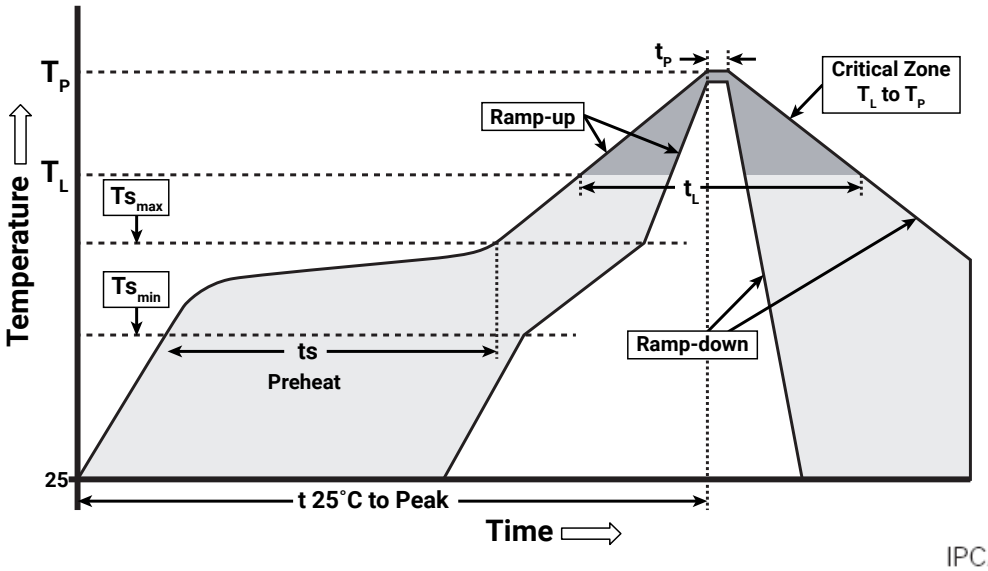

IPC/JEDEC J-STD-020C

Profile Feature	Lead-Free Solder
Temperature Min. (Ts_{min})	150 °C
Temperature Max. (Ts_{max})	200 °C
Time (ts) from Ts_{min} to Ts_{max}	60-120 seconds
Ramp-Up Rate (T_L to T_p)	3 °C/second
Liquidus Temperature (T_L)	217 °C
Time (t_L) Maintained Above T_L	60-150 seconds
Peak Package Body Temperature (Tp)	260 °C max.
Time (tp) Within 5 °C of the Specified Classification Temperature (Tc)	30 seconds max.
Ramp-Down Rate (T_p to T_L)	6 °C/second max.
Time 25 °C to Peak Temperature	8 minutes max.

Note: All temperatures refer to the topside of the package, measured on the package body surface.

Copyright © 2018 Cree, Inc. All rights reserved. The information in this document is subject to change without notice. Cree® is a registered trademark and the Cree logo and J Series™ are trademarks of Cree, Inc. J Series products are marketed by Cree, Inc. for the benefit of Cree Venture LED Company Limited.

NOTES

Measurements

The luminous flux, radiant power, chromaticity, forward voltage and CRI measurements in this document are binning specifications only and solely represent product measurements as of the date of shipment. These measurements will change over time based on a number of factors that are not within Cree Venture's control and are not intended or provided as operational specifications for the products. Calculated values are provided for informational purposes only and are not intended or provided as specifications.

Pre-Release Qualification Testing

Please read the J Series Reliability Overview for the details of the pre-release qualification testing for J Series LEDs.

Lumen Maintenance

Cree Venture uses standardized IES LM-80-08 and TM-21-11 methods for collecting long-term data and extrapolating LED lumen maintenance. For information on the specific LM-80 data sets available for this LED, refer to the public J Series LM-80 results document.

Please read the Thermal Management application note for details on how thermal design, ambient temperature, and drive current affect the LED junction temperature.

Moisture Sensitivity

Cree Venture recommends keeping J Series 2835 Value LEDs in the provided, resealable moisture-barrier packaging (MBP) until immediately prior to soldering. Unopened MBP that contains J Series 2835 Value LEDs does not need special storage for moisture sensitivity.

Once the MBP is opened, J Series 2835 Value LEDs should be handled and stored as MSL 3 per JEDEC J-STD-033, meaning they have limited exposure time before damage to the LED may occur during the soldering operation. The table on the right specifies the maximum exposure time in days depending on temperature and humidity conditions. LEDs with exposure time longer than the specified maximums must be baked according to the baking conditions listed below.

Moisture Sensitivity Level	Temp.	Maximum Percent Relative Humidity				
		50%	60%	70%	80%	90%
Level 3	35 °C	8	5	1	0.5	0.5
Level 3	30 °C	11	7	1	1	1
Level 3	25 °C	14	10	2	1	1
Level 3	20 °C	20	13	2	1	1

Baking Conditions

It is not necessary to bake all J Series 2835 Value LEDs. Only the LEDs that meet all of the following criteria must be baked:

1. LEDs that have been removed from the original MBP.
2. LEDs that have been exposed to a humid environment longer than listed in the Moisture Sensitivity section above.
3. LEDs that have not been soldered.

LEDs should be baked at 60 °C for 24 hours. LEDs may be baked in the original reels. Remove LEDs from the MBP before baking. Do not bake parts at temperatures higher than 60 °C. This baking operation resets the exposure time as defined in the Moisture Sensitivity section above.

Copyright © 2018 Cree, Inc. All rights reserved. The information in this document is subject to change without notice. Cree® is a registered trademark and the Cree logo and J Series™ are trademarks of Cree, Inc. J Series products are marketed by Cree, Inc. for the benefit of Cree Venture LED Company Limited.

NOTES - CONTINUED

Vision Advisory

WARNING: Do not look at an exposed lamp in operation. Eye injury can result. For more information about LEDs and eye safety, please refer to the J Series LED Eye Safety application note.

Copyright © 2018 Cree, Inc. All rights reserved. The information in this document is subject to change without notice. Cree® is a registered trademark and the Cree logo and J Series™ are trademarks of Cree, Inc. J Series products are marketed by Cree, Inc. for the benefit of Cree Venture LED Company Limited.

MECHANICAL DIMENSIONS

Thermal vias, if present, are not shown on these drawings.

All measurements are ±0.2 mm unless otherwise indicated.

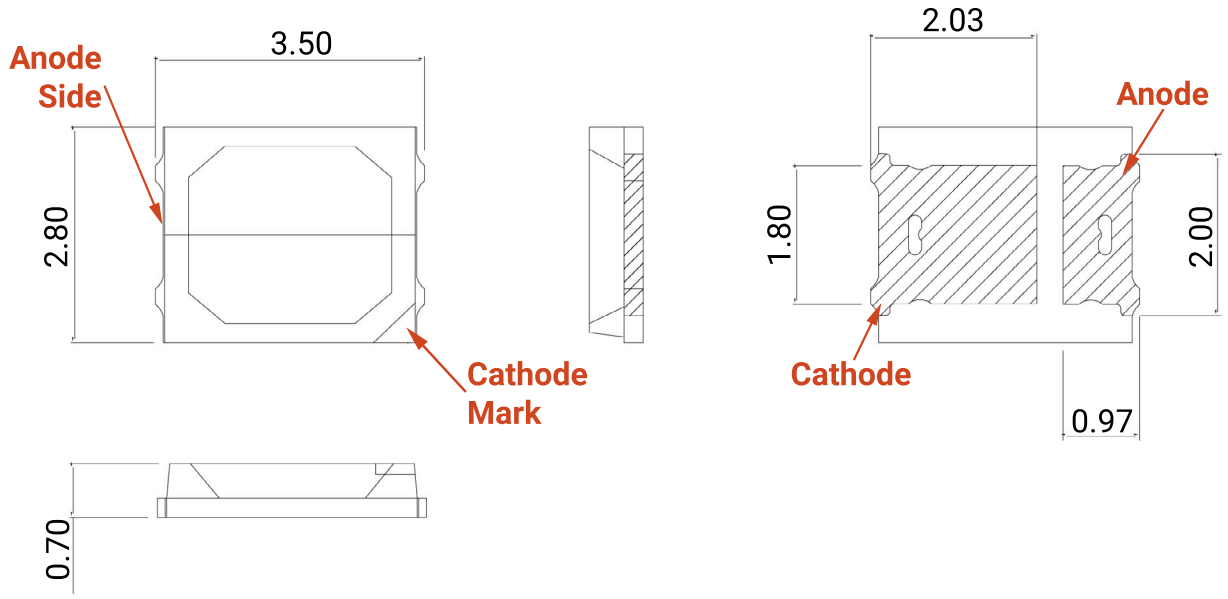

All measurements are ±0.1 mm unless otherwise indicated.

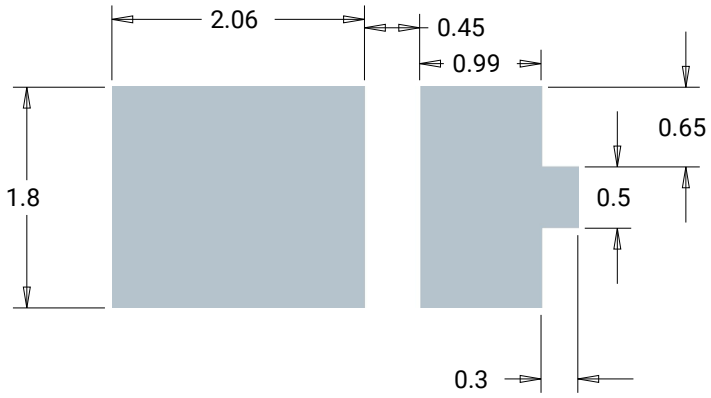

Recommended Solder Pad

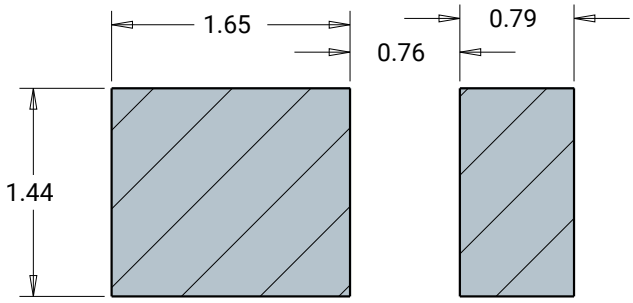

Recommended Stencil Pattern (Hatched Area Is Open)

Copyright © 2018 Cree, Inc. All rights reserved. The information in this document is subject to change without notice. Cree® is a registered trademark and the Cree logo and J Series™ are trademarks of Cree, Inc. J Series products are marketed by Cree, Inc. for the benefit of Cree Venture LED Company Limited.

TAPE & REEL

All Cree Venture carrier tapes conform to EIA-481D, Automated Component Handling Systems Standard.

All dimensions in mm.

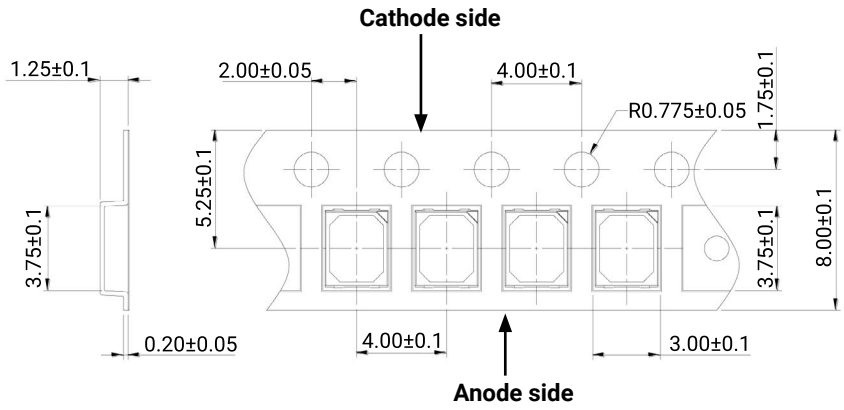

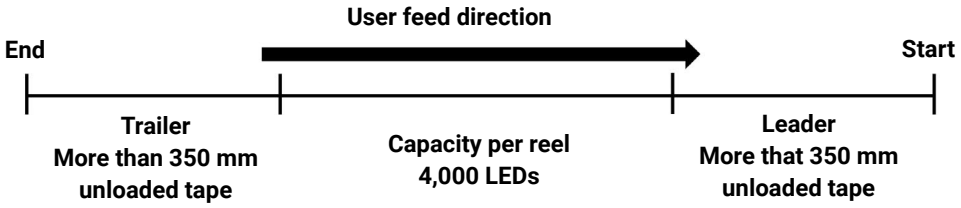

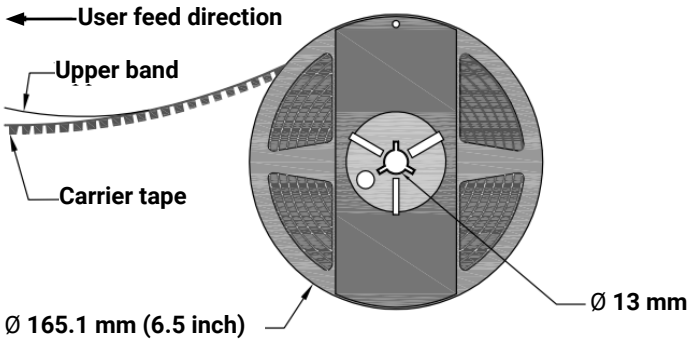

Copyright © 2018 Cree, Inc. All rights reserved. The information in this document is subject to change without notice. Cree® is a registered trademark and the Cree logo and J Series™ are trademarks of Cree, Inc. J Series products are marketed by Cree, Inc. for the benefit of Cree Venture LED Company Limited.

PACKAGING

Unpackaged Reel

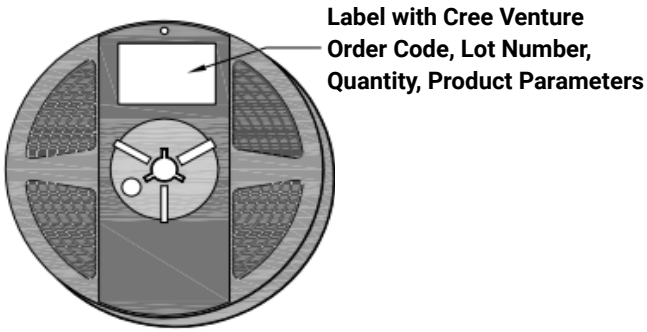

Packaged Reel

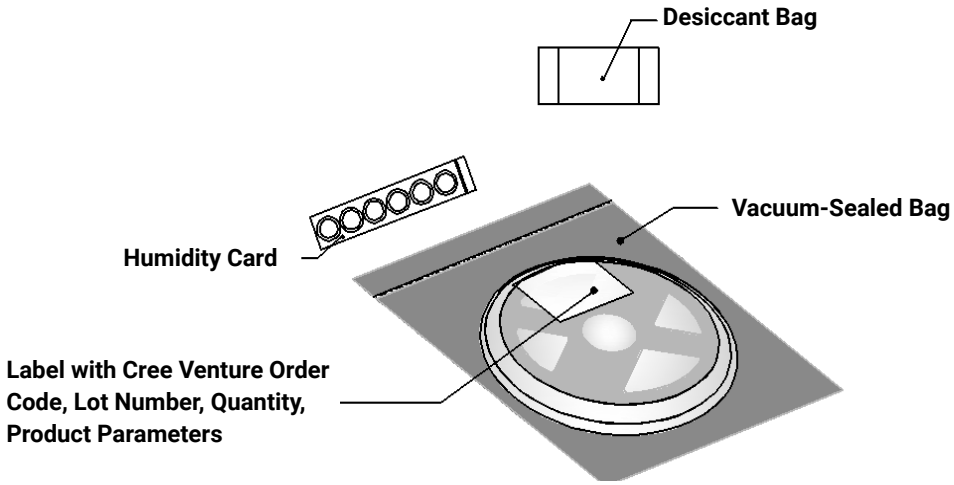

Copyright © 2018 Cree, Inc. All rights reserved. The information in this document is subject to change without notice. Cree® is a registered trademark and the Cree logo and J Series™ are trademarks of Cree, Inc. J Series products are marketed by Cree, Inc. for the benefit of Cree Venture LED Company Limited.

PACKAGING - CONTINUED

J Series 2835 Value LEDs are packaged in boxes for shipment. Box sizes and the number of reels per box are as follows.

Box	Box Dimensions	Number of Reels per Box
1	250 x 210 x 30 mm	2
2	250 x 210 x 50 mm	4
3	530 x 230 x 275 mm	44
4	530 x 443 x 275 mm	88

Each box has at least one label (shown as a white square in the diagrams below) showing the order code, lot number, quantity, and product parameters.

Box 1

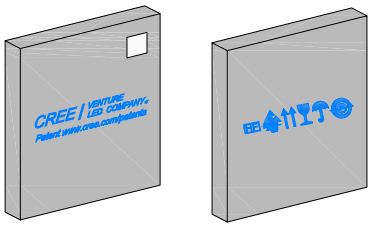

Box 2

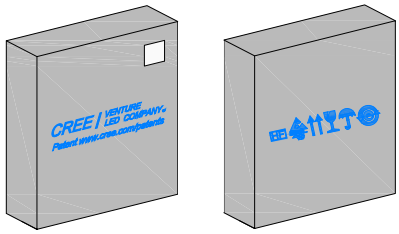

Box 3

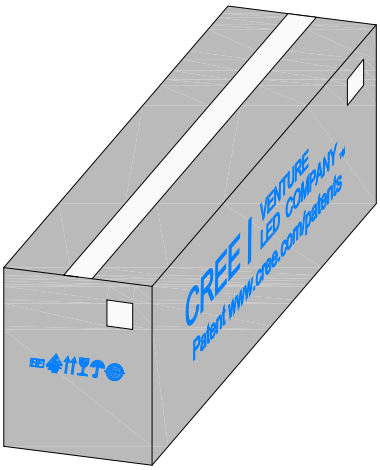

Box 4

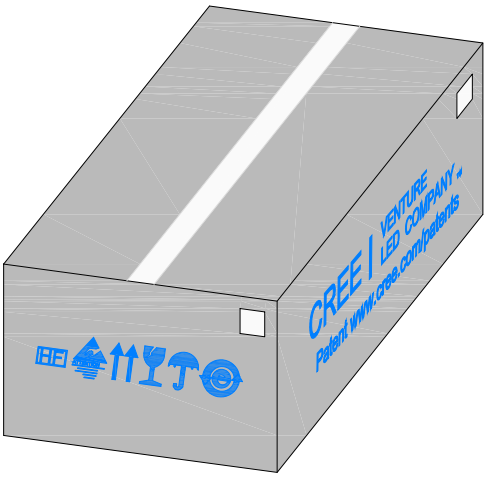

Copyright © 2018 Cree, Inc. All rights reserved. The information in this document is subject to change without notice. Cree® is a registered trademark and the Cree logo and J Series™ are trademarks of Cree, Inc. J Series products are marketed by Cree, Inc. for the benefit of Cree Venture LED Company Limited.