LedLink
Linking LEDs to The Real World

V1.2_20150730

Data Sheet

LL01CR-BLU03L06

CREE
LED Solution Provider

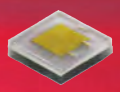

XPL-HI

Features & Typical Applications

- High efficiency
- Available with 1 beam angle
- Optimized Uniformity
- Lens without Holder
- Spotlight
- Architectural Lighting

Table of Contents

General Information & Product Nomenclature.....P.2
Optical Specifications P.3
Mechanical Specifications.....P.4
Package Specifications P.5

15F,No.655,Bannan Rd.,Chung-Ho Dist,New Taipei City,Taiwan.
Tel: +886-2-8227-6126 Fax: +886-2-8227-6127
service@ledlink-optics.com www.ledlink-optics.com

LL01CR-BLU03L06

General Information

- Lens Material : PMMA 8N
- Operating Temperature range -40℃~+70℃(upper limit +80℃).
- Storage Temperature range -40℃~+70℃(upper limit +80℃).
  * Average transmittance in visible spectrum 400nm~700nm>90%.

- Usage and Maintenance:
  1. If necessary, clean lenses with mild soap, water and soft cloth.
  2. Never use any commercial cleaning solvents on lenses, like alcohol.
  3. Please handle or install lenses with wearing gloves, skin oils may damage lens or its optical characteristic.

Product Nomenclature

X1-Ledlink

X3 - Led type
ex : ED:Edison, CR:CREE…etc.

X6 - Type
ex : L:Lens、H:Holder

LL	01	CR	-	BLU	xx	L	06
X1	X2	X3		X4	X5	X6	X7

X2 - Lens quantity
ex: 01、03、06…etc.

X4 - Serial number
ex: AA、AB、AAA、AAB…etc.

X5 - Lens angle
ex: 40、60…etc.

X7 - Type of material
ex:02-PC、06-PMMA…etc.

15F,No.655,Bannan Rd.,Chung-Ho Dist,New Taipei City,Taiwan.
Tel: +886-2-8227-6126 Fax: +886-2-8227-6127
service@ledlink-optics.com www.ledlink-optics.com

LL01CR-BLU03L06
Optical Specifications

CREE
LED Solution Provider

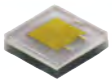

XPL-HI

Note: (1) All the results of analysis are based on 0 degrees of elevation.
(2) Tolerance: ±10%.
(3) Led Luminous Flux(lm): 136(±5%).

Part Number	FWHM	Field Angle*	cd / lm	IES File
LL01CR-BLU03L06	7.5°	16°	25.9	Download

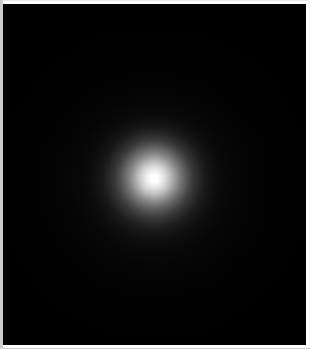

Beam Pattern

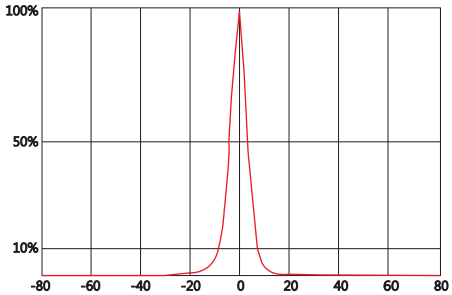

Candela Distribution

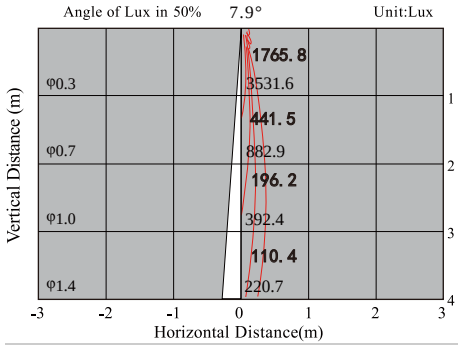

Illuminance Distribution

*The Field Angle is the angle between the two directions opposed to each other over the beam axis for which the luminous intensity is 10% that of the maximum luminous intensity.
*This testing result is obtained through testing the popular rank LED samples which provided by the original manufacturer. Hence, the testing results would be varied as the users choose same LED model but different rank.

15F,No.655,Bannan Rd.,Chung-Ho Dist,New Taipei City,Taiwan.
Tel: +886-2-8227-6126 Fax: +886-2-8227-6127
service@ledlink-optics.com www.ledlink-optics.com

LL01CR-BLU03L06
Mechanical Specification

1.Fixing method

Note: (1)All dimensions are in mm.
(2)All tolerance are ± 0.15 mm
unless otherwise specified.

■ Glue ☐ Screw ☐ Tape ☐ Fixing-ring ■ Frame

2.Lens dimension

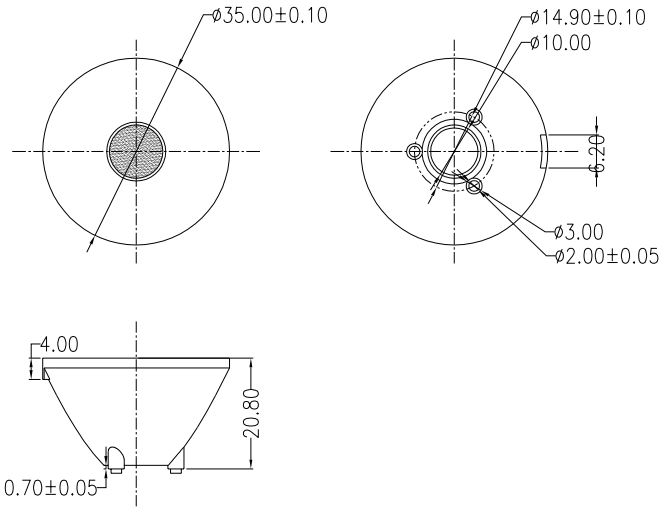

3. Lens + Leds assembly instruction

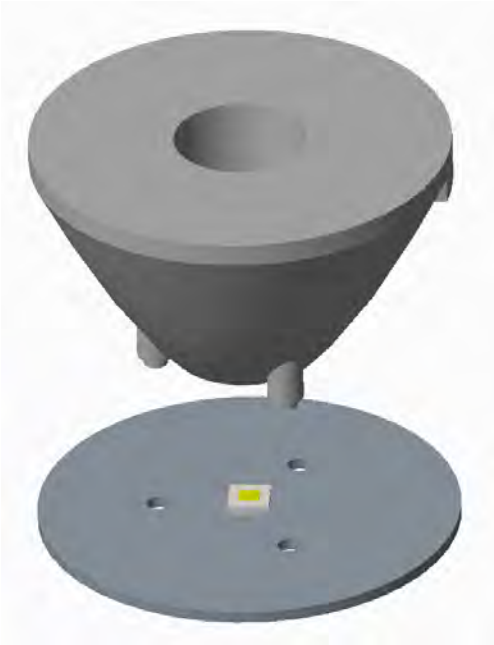

4.Holder dimension

5. View assembly lens with LED:

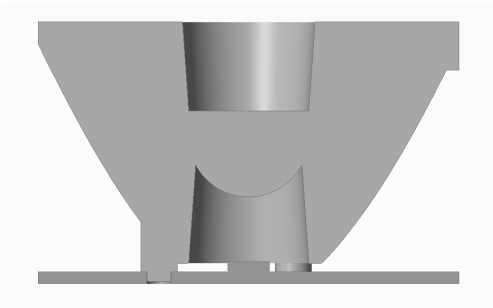

15F,No.655,Bannan Rd.,Chung-Ho Dist,New Taipei City,Taiwan.
Tel: +886-2-8227-6126 Fax: +886-2-8227-6127
service@ledlink-optics.com www.ledlink-optics.com

LL01CR-BLU03L06
Package Specifications

Item	Quantity	Total	Size(L*W*H)	G.W
plastic box	49 pcs/plastic box	49 pcs	32*29.5*2.4 cm	12.4g
outer box	8 plastic box/outer box	392 pcs	35*31*21 cm	

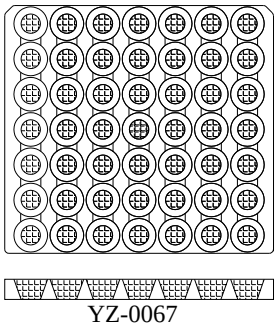

49 pcs/plastic box

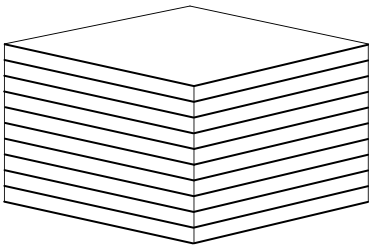

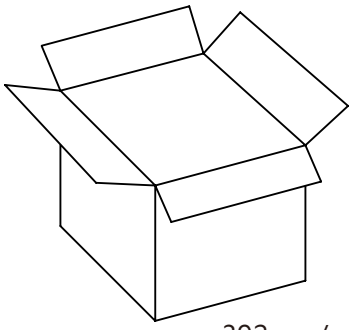

392 pcs/outer box

Note:

15F,No.655,Bannan Rd.,Chung-Ho Dist,New Taipei City,Taiwan.
Tel: +886-2-8227-6126 Fax: +886-2-8227-6127
service@ledlink-optics.com www.ledlink-optics.com