LL01CR-HQxxL-Mx Data Sheet

For CREE Multi-Color and Single-Color LEDs

Features:

- High efficiency
- Available in 2 beam Patterns
- Optimized for uniform effects
- Lens with Housing

Typical applications :

- Stage Lighting
- Street Lights
- Decorative Light
- Architectural Lighting
- Down Light

Table of Contents

General Information..... 2
General Specifications..... 2
Optical Specifications..... 3
Mechanical Specifications..... 4
Illumination charts..... 5
Package Specifications..... 6
Product Nomenclature..... 7

General Information

• Compatible Led Type：

The LL01CR-HQxxL-Mx Single lens are optimized for both Multi-Color R.G.B CREE LEDs and Single-Color Cree LEDs (Cree XP-E White)from Cree Opto.(1)

• Beam Angle Type：

An optimized profile integrate different front shape enable the generation of two different lens models: medium beam (30deg),biggest beam (40deg) (2)

• The Way to Assembly：

The Lens should be assembled to the PCB board or MCPCB upon LEDs which provides the most appropriate related position, so as to achieve the best uniform results

*** Manually installation or if necessary thermal glue are recommended.**

• Function：

LL01CR-HQxxL-Mx provides exceptional color mixing result with the highest efficiency through careful engineering and precision manufacturing process.

*Lens holders are available in Black, white and clear.

General Specifications

• Lens Material Optical Grade PMMA PC
• Operating Temperature range -40˚C ~ + 70˚C (upper limit +80˚C)
• Storage Temperature range -40˚C ~ + 70˚C (upper limit +80˚C)
*Average transmittance in visible spectrum 400nm~700nm> 90%

Notes:
(1) Cree XP-E is a trademark of Cree,Inc , for technical information on LEDs, please refer to Cree,Inc, www.cree.com/xlamp.
(2) Typical beam divergence will be affected by different color of LEDs.

Copyright © 2008-2009 All rights reserved. The information in this document is subject to change without notice.

Optical Specifications [Typical beam Angle and intensity (cd/lm) of LL01 lens]

- CREE XP-E LED

Typical Cone Angle (degree)(3) with CREE XP-E			
Part Number	Red LEDs	Green LEDs	Blue LEDs
LL01CR-HQ30L-M2	--	--	--
LL01CR-HQ40L-M2	--	--	--

The typical cone angle measures where the luminous intensity is 90% of the peak value of intensity.This typical cone varies with LED color due to different chip size and chip position tolerance.

Typical on axis intensity (cd/lm)(4) with CREE XP-E			
Part Number	Red LEDs	Green LEDs	Blue LEDs
LL01CR-HQ30L-M2	--	--	--
LL01CR-HQ40L-M2	--	--	--

Luminous intensity depends on the flux binning and tolerance of the LEDs. Please refer to the LEDs data sheet for more details on Flux binning and mechanical tolerance.

- CREE XP-E LED

Typical Cone Angle (degree)(3) with CREE XP-E			
Part Number	White LEDs	Warm white LEDs	
LL01CR-HQ30L-M2	29	28	
LL01CR-HQ40L-M2	36	37	

The typical cone angle the full angle measured where the luminous intensity is 90% of the peak value of intensity. That typical cone varies with LED color due to different chip size and chip position tolerance.

Typical on axis intensity (cd/lm)(4) with CREE XP-E			
Part Number	White LEDs	Warm white LEDs	
LL01CR-HQ30L-M2	770	685	
LL01CR-HQ40L-M2	650	425	

Luminous intensity depends on the flux binning and tolerance of the LEDs. Please refer to the LEDs data sheet for more detail on Flux binning and mechanical tolerance

Notes:

(3) The typical divergence will be changed by different color, chip size and chip position tolerance.The typical total divergence is the full angle measured where the luminous intensity is half of the peak value.

(4) The efficiency value listed above is the total value of the whole lens model, the value depends on the total flux of the LED used. Luminous intensity depends on the LEDs flux and its tolerances, for more details of LED flux, please check Cree data sheet at www.cree.com.

Copyright © 2008-2009 All rights reserved. The information in this document is subject to change without notice.

Mechanical Specifications

- Usage and Maintenance :
  1. If necessary, clean lenses with mild soap, water and soft cloth
  2. Never use any commercial cleaning solvents on lenses, like alcohol
  3. Please handle or install lenses with wearing gloves, skin oils may damage lens or its optical characteristic.

1. Lens + Leds+MCPCB assembly instruction

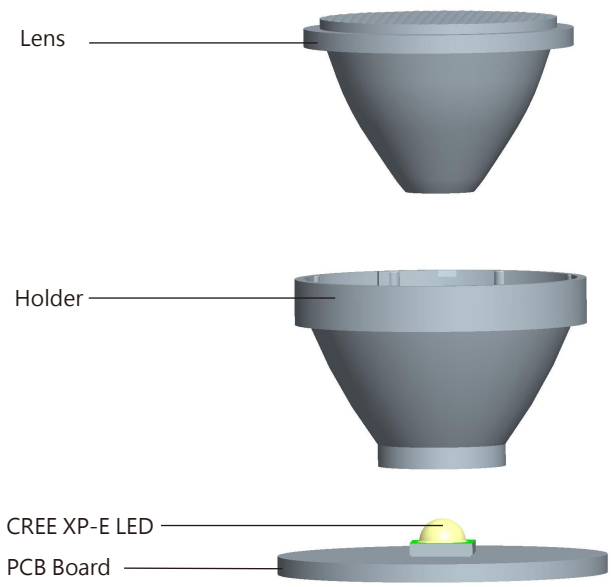

3. Lens dimensions and Top Views:

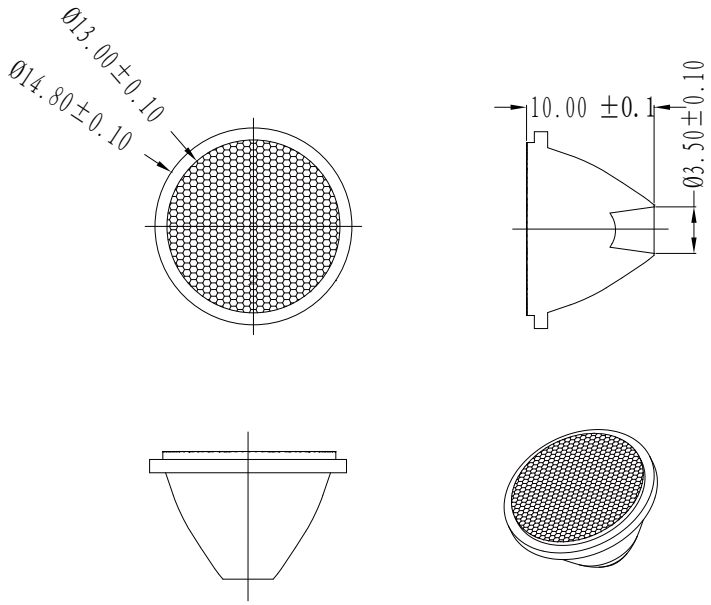

2. View assembly lens with MCPCB:

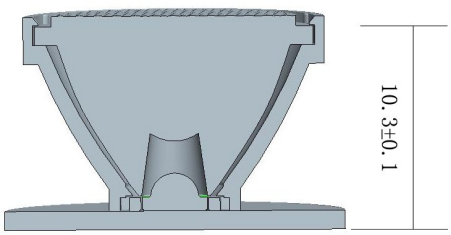

4. Lens assembly Dimensions and Top Views :

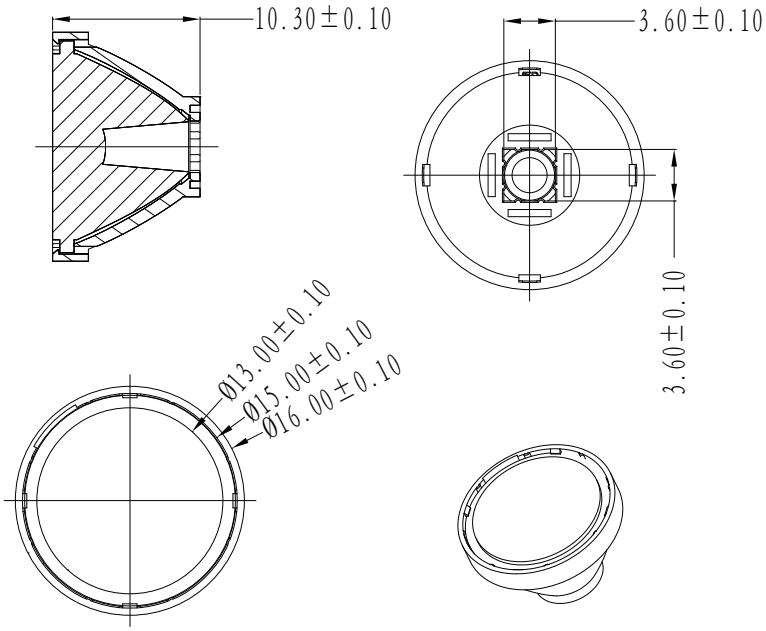

Notes:
(1) All dimensions are in mm.
(2) Drawing not to scale.
(3) Collimator material is PMMA.

Copyright © 2008-2009 All rights reserved. The information in this document is subject to change without notice.

Illumination charts

*CREE single white LED: CREE XP-E

LL01CR-HQ30L-M2	LL01CR-HQ40L-M2
1. Beam Pattern	1. Beam Pattern
2. Light Distribution Curve	2. Light Distribution Curve
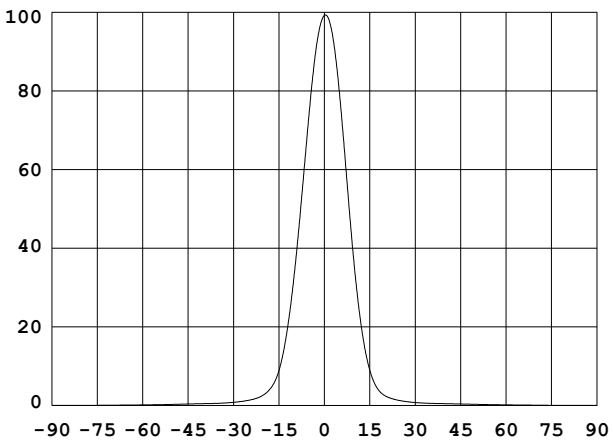	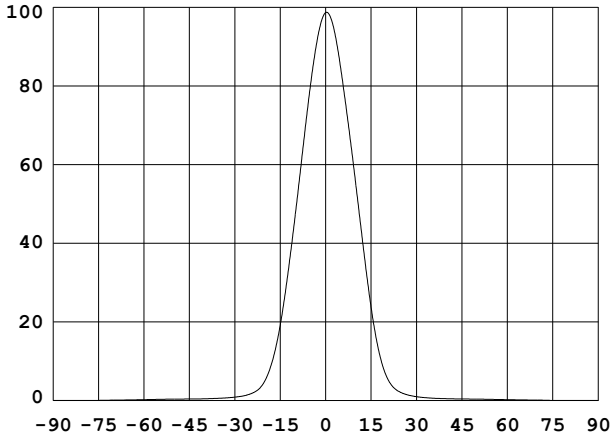
3. Illuminance	3. Illuminance
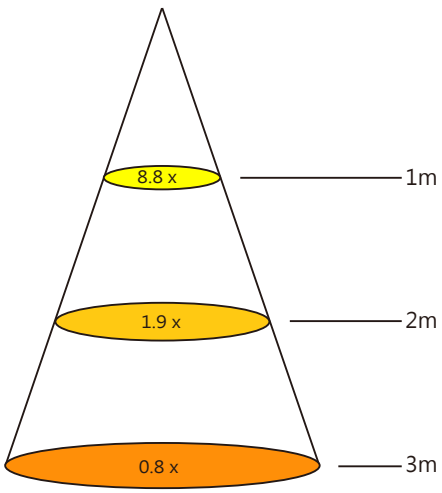	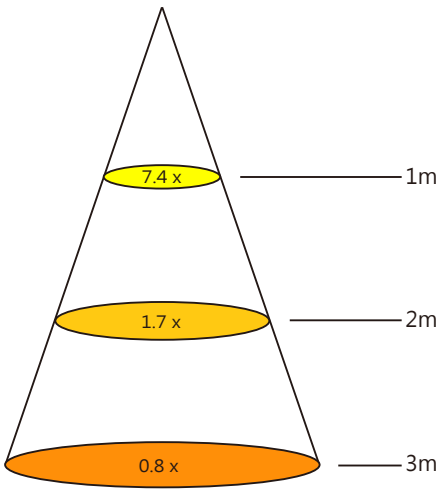

Notes: The Flux of CREE XP-E LED is 88 lm

Copyright © 2008-2009 All rights reserved. The information in this document is subject to change without notice.

Package

Item	Quantity	Total	Size (long*width* high)
Inner box		1pcs	10 *4 cm
Outer box	250pcs/plastic bags	250pcs	50*42 cm
Outer box	2000pcs/box	2000pcs	40*37*21 cm

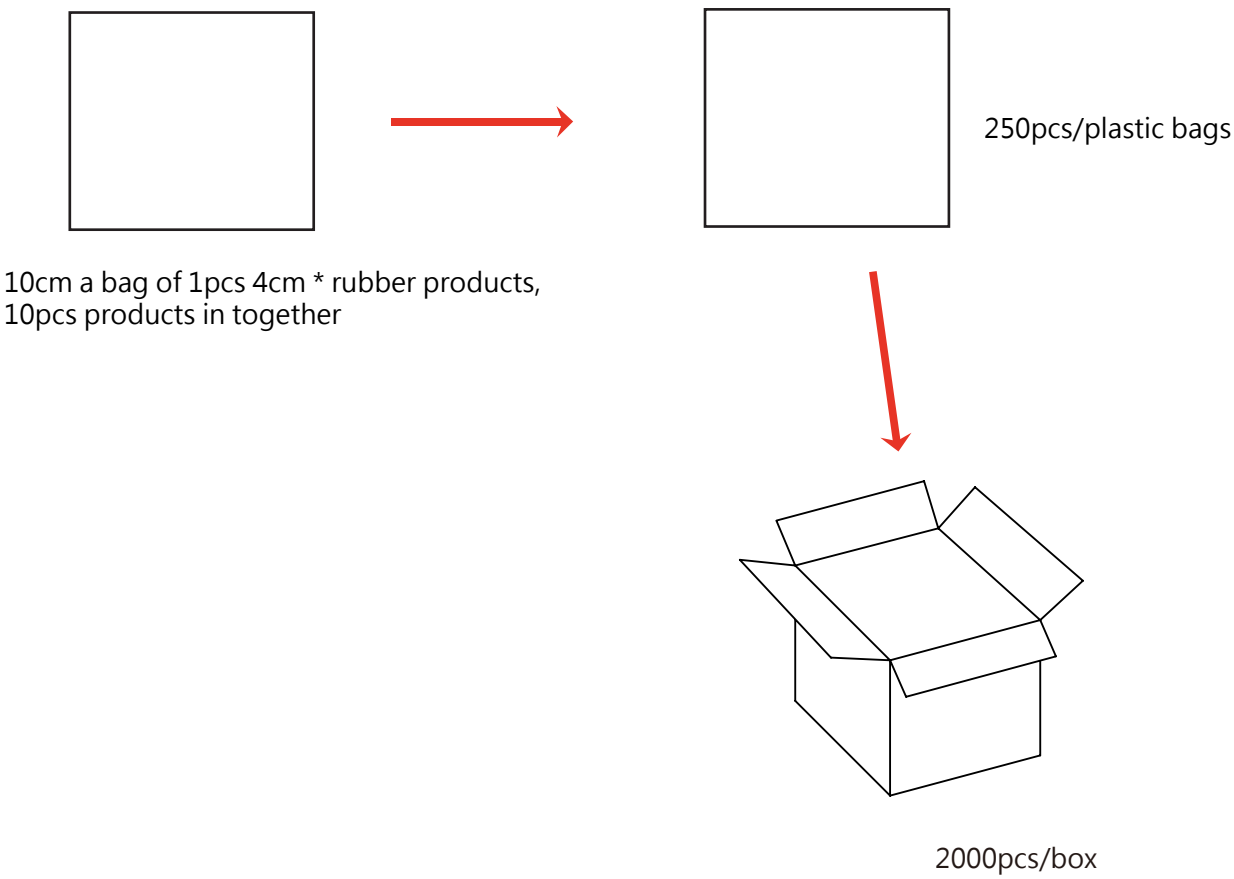

Copyright © 2008-2009 All rights reserved. The information in this document is subject to change without notice.

Product Nomenclature

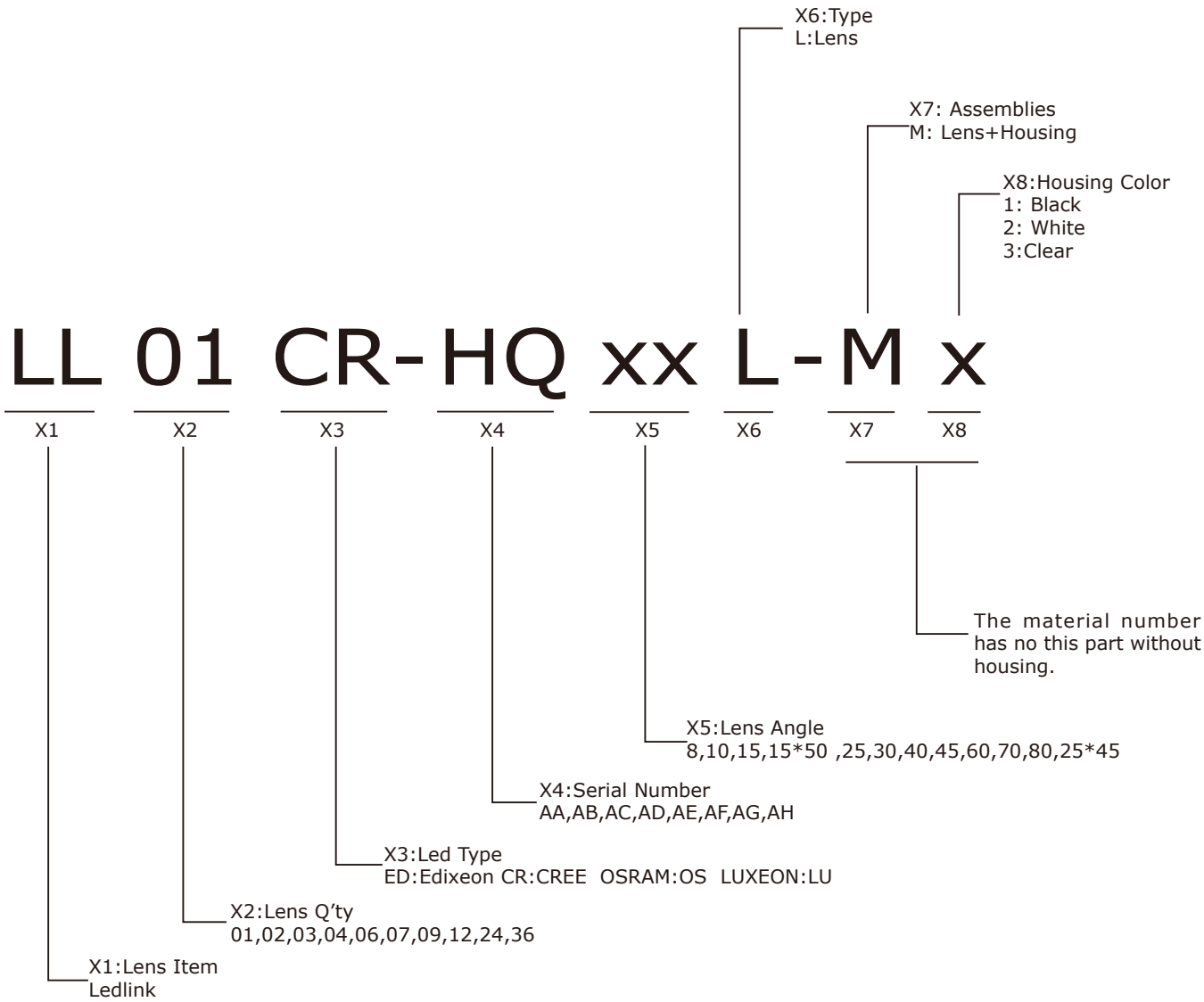

Copyright © 2008-2009 All rights reserved. The information in this document is subject to change without notice.