Product Specifications

RGB LED amplifier

NEO-AMP12A



Summarization

RGB amplifier applies to all the voltage-controlled LED controller in our company,it can receives PWM(Pulse Width Modulation), each time add one RGB amplifier, the connecting number of led will be more than twice, in theory, numerous RGB amplifiers can be connected.

Technical parameters

- working temperature: -20-60℃
- supply voltage: DC5V, 12V , 24V optional（Specify the required voltage on order form）
- output: 3 channels
- connection mode: common anode
- external dimension: L114xW65xH25mm
- packing size: L122xW85xH42mm
- net weight: 110g
- gross weight: 135g
- static power consumption: <1W
- output current: <4A(each channel)
- output power: 5V:<60W, 12V:<144W, 24V:<288W

External Dimension

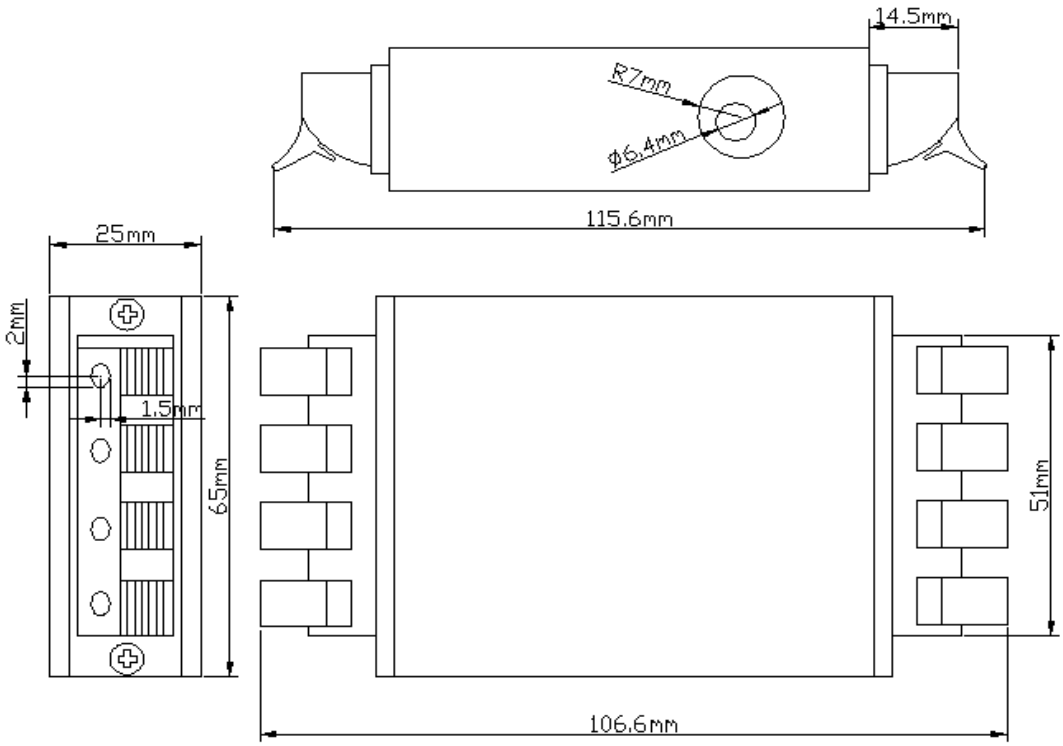

Interface Specifications

power input interface:



Adopt conventional DC power transposon as power input interface

signal input/output interface:



Adopt audio cable terminals,it¡s easy to install and debug.

Direction for Use

according to the silk-screen prompts on the panel of RGB amplifier, to connect input and output signal wires in order to ensure short circuit can not occur between wires,and then connect power for RGB amplifier,and RGB amplifier goes hand in hand with LED controller,please refer to the following < Typical applications>.

Technical Application

structure one:serial connection,two or more power switch.

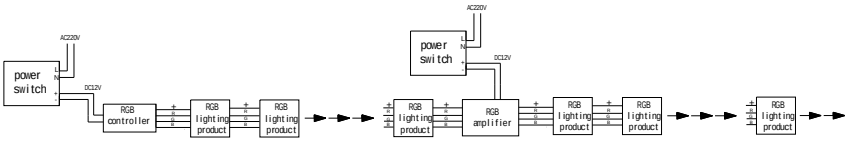

structure two:serial connection,one power switch.

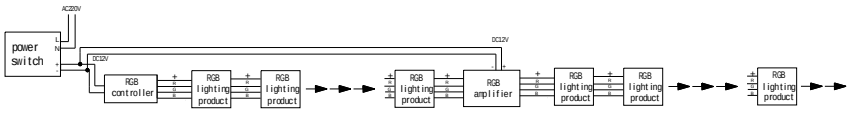

structure three: parallel connection,one power switch.

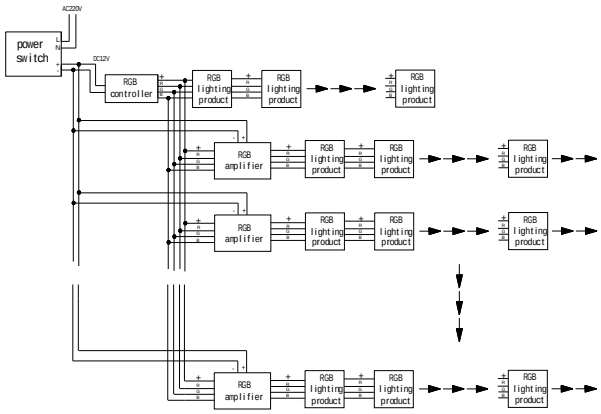

structure four: parallel,two or more power switch.

