Specification

规格书

Customer Name: _____
客户名称

Customer P/N: _____
客户型号

Refond P/N : RE35A8-IRX-FR
公司型号

Sending Date: _____
供货日期

Confidential

■Technical Reference 技术参考			☐Sample 样品		☐Mass Product 量产供货
Customer approval 客户审核			Refond approval 瑞丰审核		
Approval 核准	Audit 确认	Confirmation 制作	Approval 核准	Audit 确认	Confirmation 制作
☐Qualified 接受	☐Disqualified 不接受		Date ： 日期:		

Address: 1-8th Floor, Building #1,10th Industrial Zone, Tian Liao Community, Gong Ming Area, Guang Ming New District, Shenzhen, China.
地址： 深圳市光明新区公明办事处田寮社区第十工业区 1 栋一至八楼
Tel/电话：0755-66839118 **Fax/传真：**0755-66839300 **Web/网址：**www.refond.com

RE35A8-IRX-FR

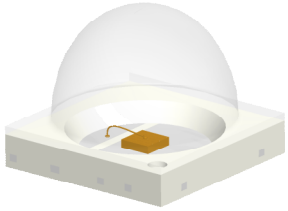

Features 特征

- Size(mm): 3.50×3.50×2.85mm. 尺寸(mm):3.50×3.50×2.85mm
- High reliability. 高可靠性
- Low forward voltage. 低电压
- Peak wavelength λp=850nm. 峰值波长850nm
- Pb-free reflow soldering application. 无铅回流焊应用
- RoHS compliant. 符合RoHS
- Package:500pcs/reel. 包装:每卷500pcs
- Moisture Sensitive Level: Level3. 防潮等级：Level 3

Description 描述

This product uses the EMC Molding package, it has a high reliability. it also be widely application for security monitoring and sensor, Such as Surveillance systems ,Infrared Illumination for cameras and Machine vision systems.

本产品采用EMC Molding封装结构,可靠性高. 广泛运用于各类安防监控和传感器的电子产品中， 如监视系统，红外相机，机器视觉系统。

Applications 应用

- Surveillance systems.监视系统
- Infrared Illumination for cameras. 红外相机
- Machine vision systems. 机器视觉系统

Product number explanation 产品命名说明

Group 1			Group 2		Group 3	
R	E35	A8	IR	X	F	R
瑞丰	支架型号 EMC3535	三安芯片 产品角度 84° （15%-20%Imax）	芯片波长 （830-870nm）	芯片尺寸 24*24mil	支架规格 白色镀银	硅胶

Confidential

Package Dimension 封装尺寸

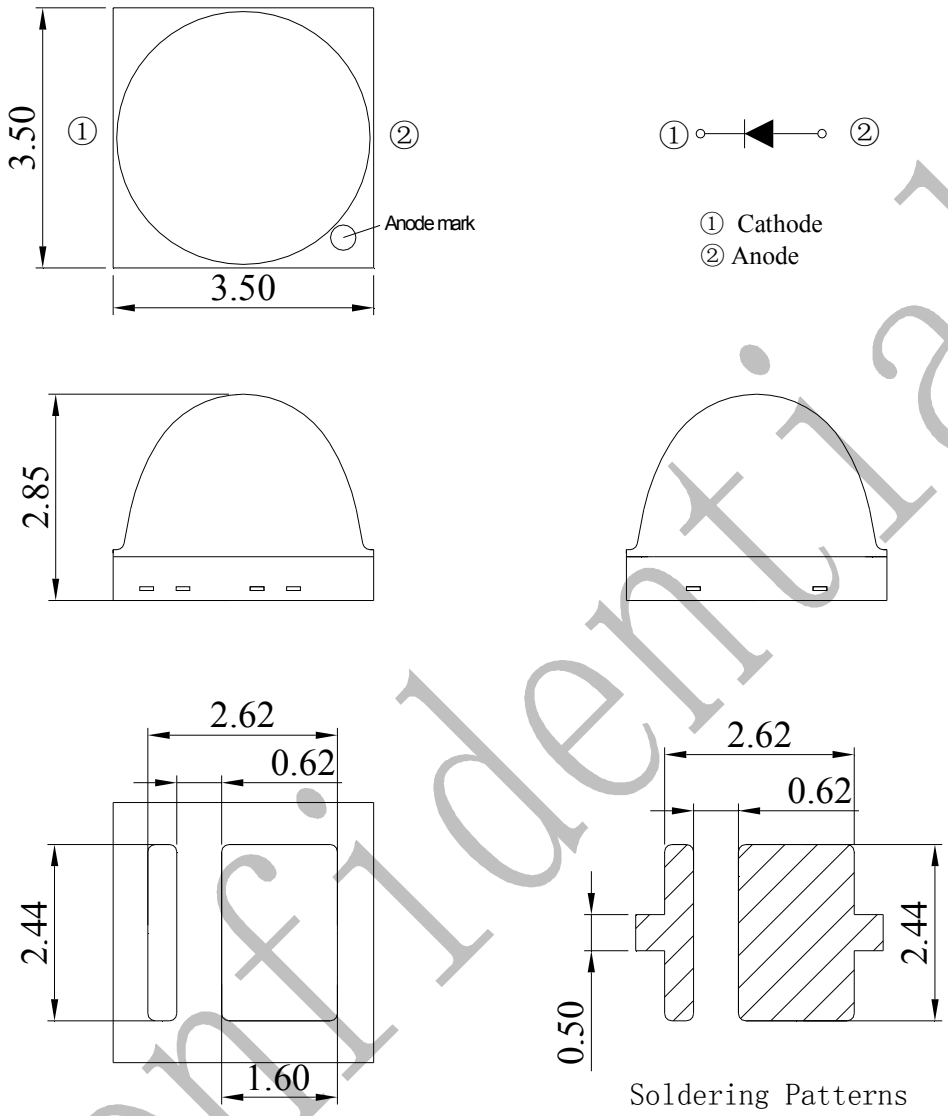

Confidential

Note: 备注

1.All dimensions units are mm.
所有尺寸标注单位为毫米。

2. All dimensions tolerances are ±0.2mm unless otherwise noted.
除特别标注外，所有尺寸允许公差为±0.2毫米。

Electrical/Optical Characteristics at Ts=25°C 电性与光学特性（Ts=25° C）

Parameter 参数名称	Symbol 符号	Condition 条件	Value 参数			Unit 单位
			Min	Typ	Max	
Reverse Current	IR	VR = 5V	---	---	10	μA
Forward Voltage	VF	IF = 500mA	1.4	1.6	1.8	V
Peak Wavelength	λp	IF = 500mA	830	850	---	nm
Spectrum Radiation Bandwidth	Δλ	IF = 500mA	---	30	---	nm
Total radiant flux	Φe	IF = 500mA	224	360	450	mW
Viewing Angle （15%-20%Imax）	$2\Theta_{1/2}$	IF = 500mA	---	84	---	deg
Thermal resistance	Rth(j-s)	IF = 500mA		14		℃/W

Absolute Maximum Ratings at Ts=25°C 最大极限参数值（Ts=25° C）

Parameter 参数名称	Symbol 符号	Absolute Maximum Rating 极限参数	Unit 单位
Forward Current 正向电流	IF	500	mA
Reverse Voltage 反向电压	VR	5	V
Operating Temperature 工作温度	Topr	-40 ~ +85	℃
Storage Temperature 贮存温度	Tstg	-40 ~ +100	℃
Power Dissipation 功耗	Pd	0.9	W
Electrostatic Discharge (HBM) 静电放电(人体模式)	ESD	2000	V
Junction temperature 结温	Tj	95	℃

Note: 备注

1. The above forward voltage measurement allowance tolerance is ±0.1V.
   以上所示电压测量误差±0.1V。
2. Tolerance of measurement of Total radiant flux/ Radiant Intensity:±10%.
   辐射功率/强度测量公差：±10%。
3. Care is to be taken that power dissipation does not exceed the absolute maximum rating of the product.
   使用功率不能超过规定的最大值。
4. When the LEDs are in operation the maximum current should be decided after measuring the package temperature, junction temperature should not exceed the maximum rate.
   LED使用最大电流需根据散热条件确定，结温不能超过最大值。

Confidential

Typical Optical Characteristics Curves 典型光学特性曲线

Fig.1-Forward Voltage Vs. Forward Current
伏安特性曲线

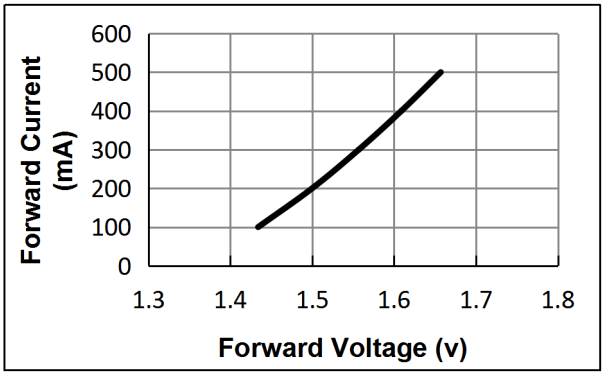

Fig.2-Forward Current Vs. Relative Intensity
正向电流与相对光强特性曲线

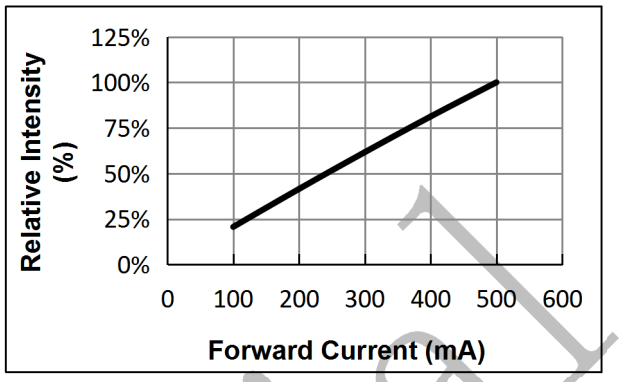

Fig.3-Ts Temperature Vs. Relative Intensity
焊盘温度与相对光强特性曲线

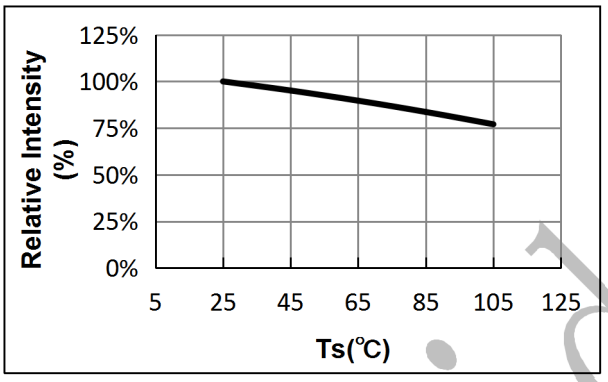

Fig.4-Spectrum Distribution
光谱分布特性曲线

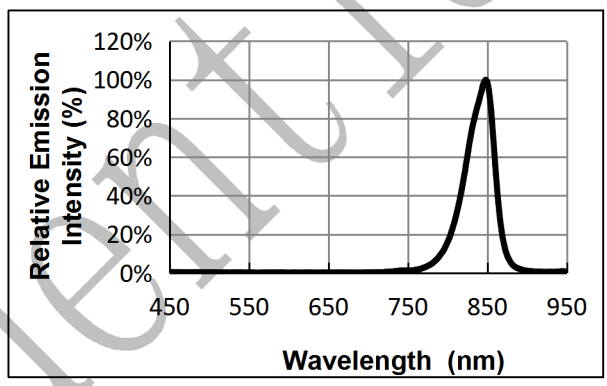

Fig.5-Radiation Diagram
辐射特性曲线

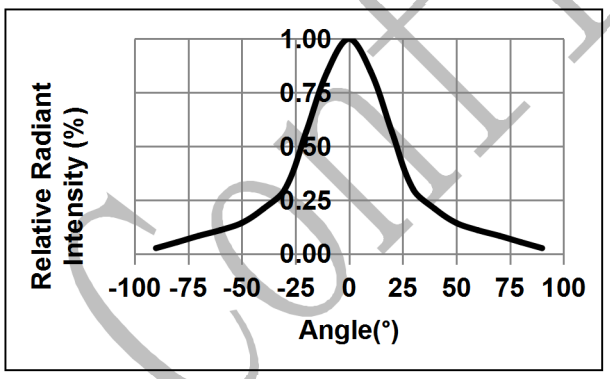

Fig.6-TsTemperature Vs. Forward Current
焊盘温度与正向电流特性曲线

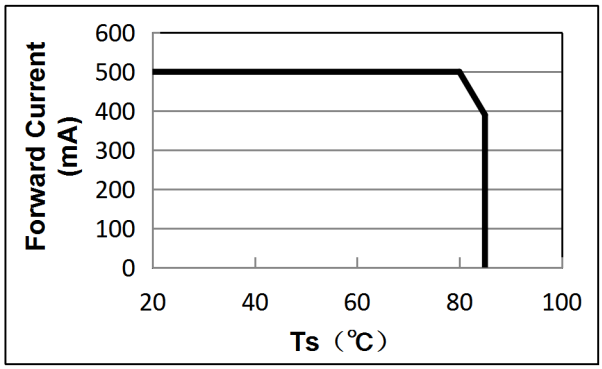

Note: 备注

All the parameters and standards in the specification are based on Refond standard test platform.
规格书中所有参数和标准都是基于瑞丰的标准测试平台。

Confidential

Packaging Specifications 包装规格

■ Carrier Tape Dimensions 载带尺寸

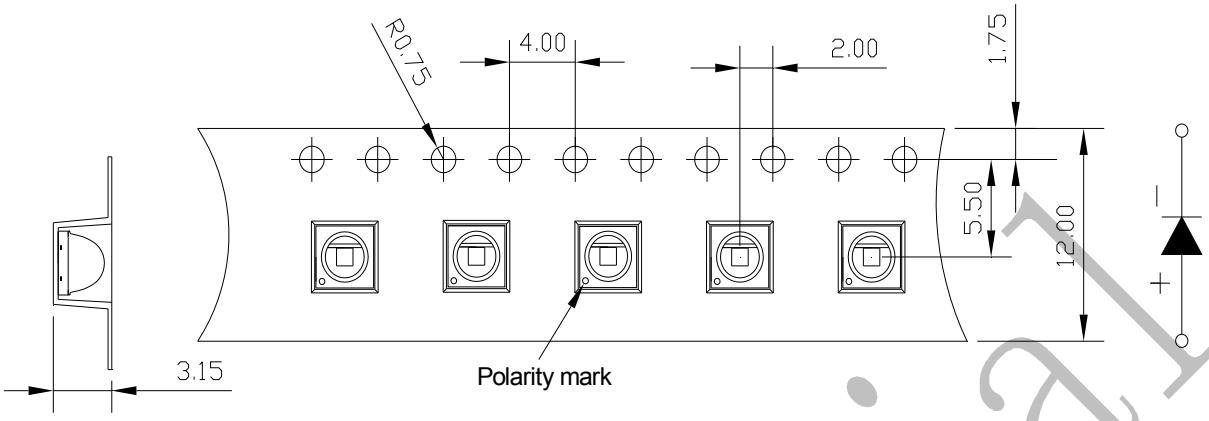

■ Reel Dimension 卷盘尺寸

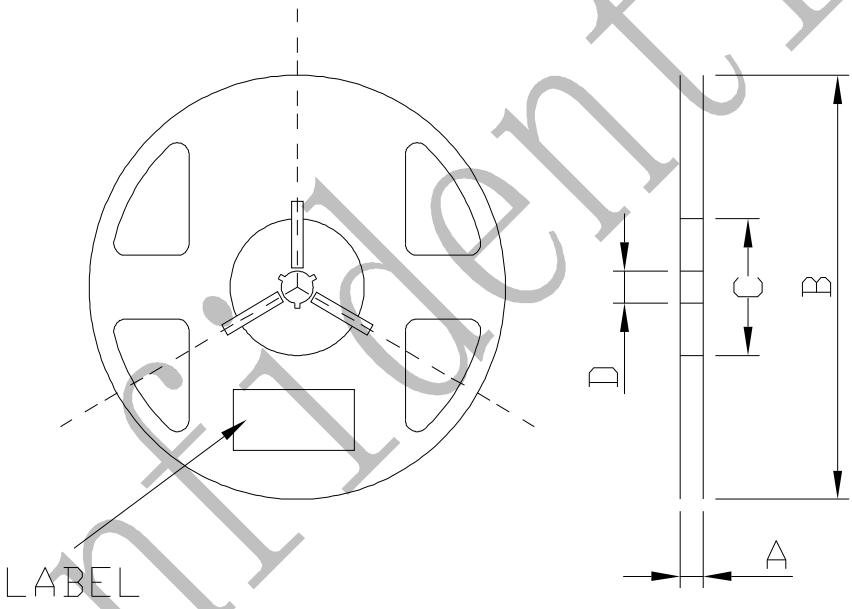

Confidential

Note: 备注

The tolerances unless mentioned ±0.1mm. Unit : mm
未标注公差为±0.1毫米，尺寸单位：毫米。

■ Label Form Specification 标签规格

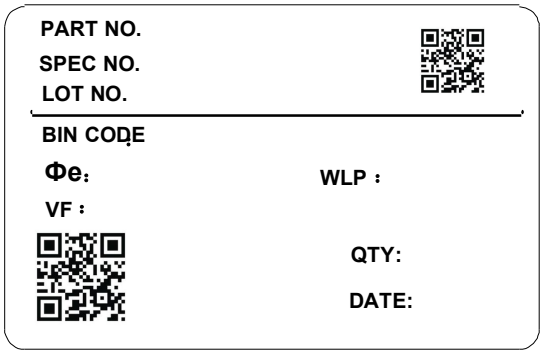

PART NO	Part Number 品名
SPEC	Spec Number 规格
LOT NO	Lot Number 批次号
BIN CODE	Bin Code 色区
Φe	Total radiant flux 光功率
WLP	Peak Wavelength 峰值波长
VF	Forward Voltage 正向电压
QTY	Packing Quantity 数量
DATE	Made Date 生产日期

■ Moisture Resistant Packing Process 防潮包装过程

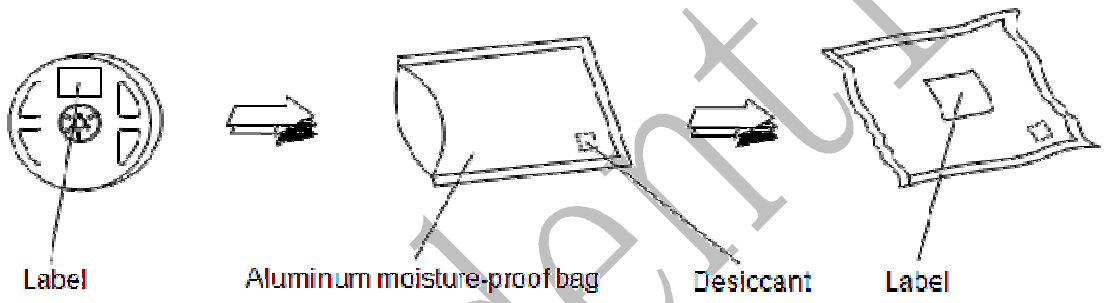

■ Cardboard Box 纸箱

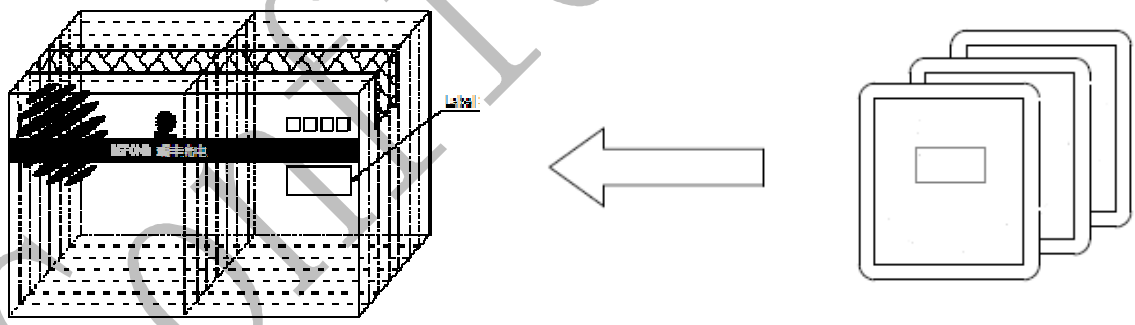

Confidential

Reliability Test Items And Conditions 可靠性测试项目及条件

Test Items 项目	Ref.Standard 参考标准	Test Condition 测试条件	Time 时间	Quantity 数量	Ac/Re 接收/拒收
Reflow 回流焊	JESD22-B106	Temp:260°Cmax T=10 sec	3times.	10Pcs.	0/1
Temperature Cycle 温度循环	JESD22-A104	100°C 30 min. ↑↓5 min -40°C 30 min.	300 Cycles	10Pcs.	0/1
Thermal Shock 冷热冲击	JESD22-A104	-40°C15min ↑↓10sec 100°C 15min	300 Cycles	10Pcs.	0/1
High Temperature Storage 高温保存	JESD22-A103	Temp.:100°C	1000Hrs	10Pcs.	0/1
Low Temperature Storage 低温保存	JESD22-A119	Temp.:-40°C	1000Hrs	10Pcs.	0/1
Life Test 常温老化	JESD22-A108	Ta=25°C IF=500mA	1000Hrs	10Pcs.	0/1
High Temperature High Humidity Life Test 高温高湿老化	JESD22-A101	60°C/ 90%RH IF=500mA	1000Hrs	10Pcs.	0/1

HALT Test Items Condition HALT 试验项目条件

连续试验顺序：低温阶梯应力→高温阶梯应力→快速温变循环→振动阶梯应力→快速温变循环和振动复合应力

Test Items 实验项目	Test Conditions 实验条件	Time 时间	Quantity 样品数	Criterion 判定
Low Temperature Step Stress Test 低温阶梯应力测试	20°C →60°C/min, -5°C/Step, 10 min/ Step→ -70°C ,IF=500mA	1 times	32	0/32
High Temperature Step Stress Test 高温阶梯应力测试	30°C →60°C/min, +5°C/Step, 10 min/ Step→ 90°C ,IF=500mA	1 times		
Rapid Thermal Transition Stress Test 快速温变循环测试	-65°C←40°C/min, 10 min/ Step→85°C ,IF=500mA	10cycles		
Vibration Step Stress Test 振动阶梯应力测试	Ta=25°C, 5Grms←5Grms/step, 10 min/ Step→85°C ,IF=500mA	1 times		
Combined Thermal Transition Cycling&Vibration Stress Test 快速温变循环和振动复合应力测试	5Grms←5Grms/step→85°C -65°C←30°C/min, 10 min/ Step→85°C, IF=500mA	9 cycles		

Note: 备注

The HALT test is continuous, the order of test project is from top to bottom.
HALT试验为连续试验，试验项目顺序是由上至下。

Confidential

Criteria For Judging Damage 失效判定标准

Test Items 测试项目	Symbol 符号	Test Conditions 测试条件	Criteria for Acceptance 判定标准	
			Min. 最小	Max. 最大
Forward Voltage 正向电压	VF	IF =500mA	-	U.S.L*)x1.1
Reverse Current 反向电流	IR	VR=5V	-	U.S.L*)x2.0
Total radiant flux 辐射功率	Φe	IF=500mA	L.S.L*)x0.7	-

Note:备注

1. The Reliability tests are based on Refond existing test platform.
   可靠性测试基于瑞丰现有的测试标准。
2. The technical information shown in the data sheets are limited to the typical characteristics and circuit examples of the referenced products. It does not constitute the warranting of industrial property nor the granting of any license.
   以上技术数据仅为产品的典型值，只作为参考（以最终双方承认的规格为准），不作为任何应用条件及应用方式的保证。

Confidential

SMT Reflow Soldering Instructions SMT回流焊说明

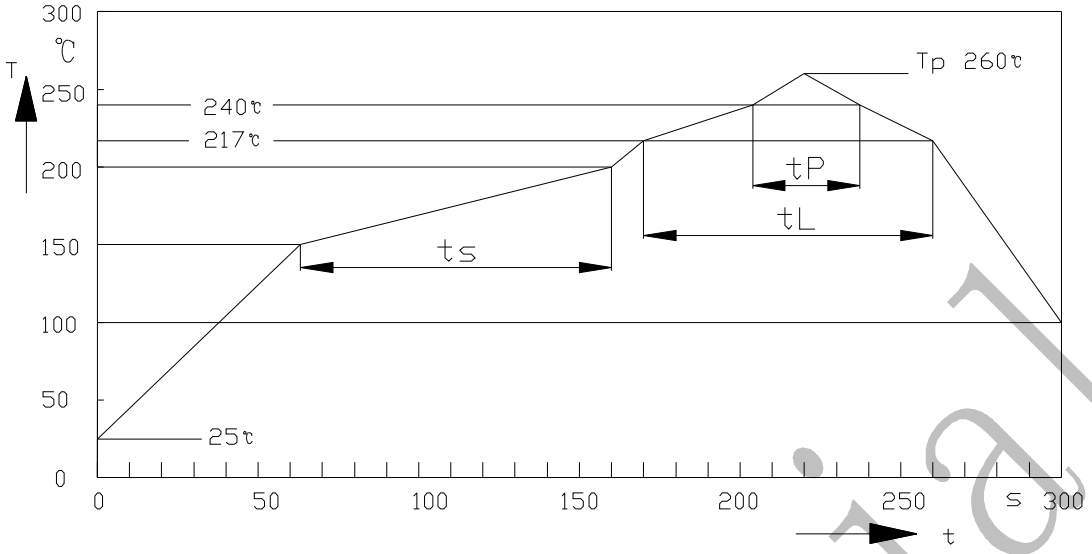

Profile Feature 剖面特征	Symbol 符号	Pb-Free(SnAgCu) Assembly 无铅锡膏			Unit 单位
		Min	Tpy	Max	
Ramp-up rate topreheat (25℃ to 150℃) 平均升温速度（Tsmax至Tp）			2	3	℃/s
Time ts (Tsmin to Tsmax) 预热：时间（tsmin至tsmax）	ts	60	100	120	s
Ramp-up rate to peak (Tsmax to Tp) Tsmax升至峰值温度的速度			2		℃/s
Liquidus temperature 限时维持高温：温度 (TL)	TL	217	℃		℃
Time above liquidus temperature 限时维持高温：时间 (tL)	tL		80	100	s
Peak temperature 峰值 / 分类温度 (Tp)	Tp		245	260	℃/s
Time within 5℃ of the specified peak temperature Tp-5℃ 与实际峰值温度(tp)相差 5 ° C 以内的保持时间	tP	10	20	30	s
Ramp-down rate（Tp to 100℃） 降温速度			3	6	℃/s
Time（25℃ to Tp） 降温速度				480	s

Note:备注

1. Reflow soldering should not be done more than two times. In the case of more than 24 hours passed soldering after first, LEDs will be damaged.
   回流焊次数不可以超两次，两次回流焊时间间隔如果超过24小时，LED可能由于吸湿而损坏。
2. When soldering , do not put stress on the LEDs during heating.
   当焊接时，不要在材料受热时用力压胶体表面。

Confidential

■ **Soldering Iron 烙铁焊接**

1. When hand soldering, keep the temperature of iron below less 300℃ less than 3 seconds.
   当手工焊接时，烙铁的温度必须小于300℃，时间不可超过3秒。
2. The hand solder should be done only one time.
   手工焊接只可焊接一次。

■ **Repairing 修补**

Repair should not be done after the LEDs have been soldered. When repairing is unavoidable, a double-head soldering iron should be used (as below figure). It should be confirmed in advance whether the characteristics of LEDs will or will not be damaged by repairing.
LED回流焊后不应该修复，当必须修复时，必须使用双头烙铁，而且事先应确认此种方式会不会损坏LED本身的特性。

■ **Cautions 注意事项**

1. The encapsulated material of the LEDs is silicone. Therefore the LEDs have a soft surface on the top of package. The pressure to the top surface will be influence to the reliability of the LEDs. Precautions should be taken to avoid the strong pressure on the encapsulated part. So when use the picking up nozzle, the pressure on the silicone resin should be proper.
   LED封装胶为硅胶，表面较软，用力按压胶体表面会影响LED可靠性，因此应有预防措施避免在按压器件，当使用吸嘴时，胶体表面的压力应是恰当的。
2. Components should not be mounted on warped (non coplanar) portion of PCB. After soldering, do not warp the circuit board.
   LED灯珠不要焊接在弯曲的PCB板上，焊接之后，也不要弯折线路板。

Handling Precautions 使用注意事项

1. LED operating environment and sulfur element composition cannot be over 100PPM in the LED mating usage material. This is provided for informational purposes only and is not a warranty or endorsement.
   LED工作环境及与LED适配的材料中，硫元素及化合物成份不可超过100PPM，单一的溴元素含量要求小于900PPM，单一氯元素含量要求小于900PPM，溴元素与氯元素总含量必须小于1500PPM（检测含量为与LED直接接触面上元素含量）。
2. VOCs (Volatile organic compounds) emitted from materials used in the construction of fixtures can penetrate silicone encapsulants of LEDs and discolor when exposed to heat and photonic energy. The result can be a significant loss of light output from the fixture. Knowledge of the properties of the materials selected to be used in the construction of fixtures can help prevent these issues. Refond advises against the use of any chemicals or materials that have been found or are suspected to have an adverse affect on device performance or reliability. To verify compatibility, Refond recommends that all chemicals and materials be tested in the specific application and environment for which they are intended to be used. Attaching LEDs, do not use adhesives that outgas organic vapor.
   应用套件中的挥发性物质会渗透到LED内部，可能对LED性能或者可靠性不利，在通电情况下会加剧影响。因此客户需提前验证，避免套件材料或其他组装原物料存在未经验证的挥发性物质，针对特定的用途和使用环境，瑞丰建议

Confidential

对所有的物质和材料进行相容性的测试。

3. Handle the component along the side surface by using forceps or appropriate tools; do not directly touch or Handle the silicone lens surface, it may damage the internal circuitry.
通过使用适当的工具从材料侧面夹取，不可直接用手或尖锐金属压胶体表面，它可能会损坏内部电路。

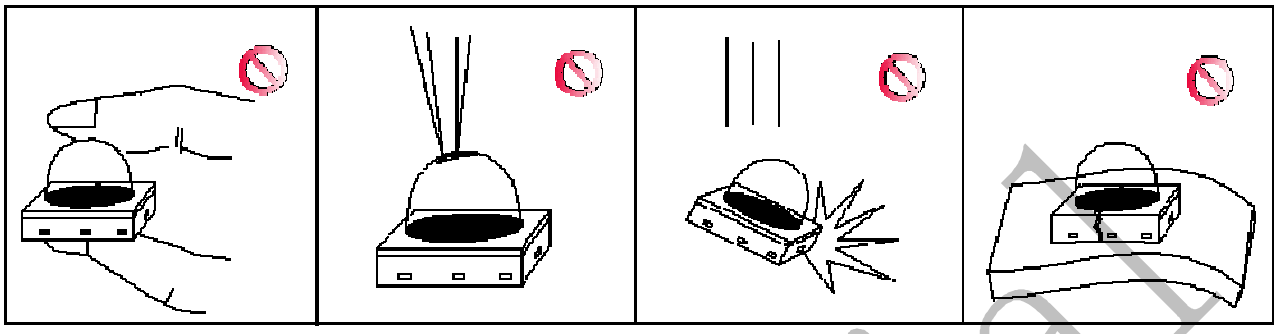

4. In designing a circuit,the current through each LED must be exceed the absolute maximum rating specified for each LED.In the meanwhile,resistors for protection should be applied,otherwise slight voltage shift will cause big current change,burn out may happen. The driving circuit must be designed to allow forward voltage only when it is ON or OFF.If the reverse voltage is applied to LED, migration can be generated resulting in LED damage.
设计电路时，通过LED的电流不能超过规定的最大值，同时，还需使用保护电阻，否则，微小的电压变化将会引起较大电流变化，可能导致产品损毁。电路设计必须保证只有在开启或者关闭的时候出现正向电压的变化，不要施加反压，否则会损坏LED。
5. Thermal Design is paramount importance because heat generation may result in the Characteristics decline,such as brightness decreased,Color change and so on.Please consider the heat generation of the LEDs when making the system design.
LED容易因为自身的发热和环境的温度改变而改变，温度升高会降低LED发光效率，影响发光颜色，所以在设计时应充分考虑散热问题。
6. Compared to standard encapsulants, silicone is generally softer, and the surface is more likely to attract dust，requiring special care during processing. In cases where a minimal level of dirt and dust particles cannot be guaranteed, a suitable cleaning solution must be applied to the surface after the soldering of components. Refond suggests using isopropyl alcohol for cleaning. In case other solvents are used, it must be assured that these solvents do not dissolve the package or resin. Ultrasonic cleaning is not recommended. Ultrasonic cleaning may cause damage to the LED.
与其他封装胶相比，硅胶通常较软，表面易吸附脏物，应用时应特别注意，当对产品洁净度要求较高时，应当采用恰当的清洗方式，我们推荐用异丙醇作清洗剂，如需要用到其他清洗剂，必须保证不会破坏封装体，超声清洗可能会对LED带来损害，不推荐这种清洗方式。
7. After opening the package, the product should be soldered within 168 hours. If not, please store at 30 ℃ or less and humidity less than RH10%. It is recommended that the product be operated at the workshop condition of 30℃ or less and humidity less than RH60%.
开封后，产品必须在168小时内使用完（建议使用温度不高于30℃，湿度不高于RH60%），如未使用完，余料须存放在温度不高于30℃湿度不高于RH10%的环境中.

Confidential

8. To avoid the moisture penetration, we recommend store in a dry box with a desiccant. The recommended storage temperature range is -5℃ to 30℃and a maximum humidity of RH60%. If the color of the desiccant changes, components should be dried for 10-12hr at 60±5℃.
   为了避免湿气进入，产品应该保存在干燥的地方，同时需要使用干燥剂，推荐的储存温度是-5℃到30℃，最大湿度不能超过RH60%，如果干燥剂变色，使用前需要烘烤10-12小时，烘烤温度为60±5℃。
9. Similar to most Solid state devices; LEDs are sensitive to Electro-Static Discharge (ESD) and Electrical Over Stress (EOS).
   LED为半导体器件，对静电敏感，生产和使用时需要做好防护。
10. There should be revalidated when there is any change on the use condition(like fixture type, raw material, Radiating change) after the approval.
    产品承认后，如需变更使用环境条件（如：转换产品种类和结构），必须重新验证。
11. When you have special quality requirement for the product, please kindly contact to our sales.
    对产品有特殊质量要求时，请提前咨询瑞丰的销售人员以取得相关信息。
12. When customers are using the LEDs, must refer to the specification parameters and the use of environmental requirements.Without the validation case beyond the use of parameters or standard conditions, Refond do not make any quality assurance.
    客户在使用LED时，需参考此规格书参数及使用环境要求，未经验证情况下超出参数或标准条件使用，瑞丰不作任何品质担保。
13. The customer shall not disassemble or analyze the LEDs without having consent from Refond. When defective LEDs are found, the customer shall inform Refond in writing directly before disassembling or analysis.
    在取得瑞丰的同意前，客户不应对产品进行拆解分析，如发现失效产品，请直接书面通知瑞丰。
14. Other points for attention, please refer to our LED user manual.
    其它注意事项请参照瑞丰LED使用手册。

Declare 申明

1. This specification is written both in English and in Chinese and the latter is formal.
   此规格书以中英文方式书写，若有冲突以中文版本为准.
2. Both the customers and Refond will agree on official specifications of supplied products before a customer's volume production. The specification is valid only after be signed. And Refond reserves the right to further modify the specification for technical reference and sample without noticing the customers.
   在量产供货前，瑞丰需与客户签署一份正式的产品规格书并各自备份。规格书签核后方有效，对于作为技术参考以及送样时提供的规格书，瑞丰保留进一步修改而不需通知客户的权力。

Confidential