SPECIFICATION
产品规格书

REFOND P/N 产品型号

RF-C35H1-RBD-FR

□R&D 研发

■Mass Product 量产供货

Contents 目录

1. Description 产品介绍 3
1.1 General Description 产品描述 3
1.2 Features 产品特征 3
1.3 Application 产品应用 3
1.4 Package Dimension 封装尺寸 4
1.5 Product Parameters 产品参数 5
1.6 Typical optical characteristics curves 典型光学特性曲线 7
2. Packaging 产品包装 10
2.1 Packaging Specification 包装规格 10
2.1.1 Carrier Tape Dimension 载带尺寸 10
2.1.2 Reel Dimension 卷盘尺寸 10
2.1.3 Label Form Specification 标签规格 11
2.2 Moisture Resistant Packing 防潮包装 11
2.3 Cardboard Box 包装纸箱 12
2.4 Reliability Test Items And Conditions 信赖性测试项目及条件 12
2.5 Criteria For Judging Damage 失效判定标准 13
3. SMT Reflow Soldering Instructions SMT 回流焊说明 14
3.1 SMT Reflow Soldering Instructions SMT 回流焊说明 14
3.1.1 Soldering Iron 烙铁焊接 15
3.1.2 Repairing 修补 15
3.1.3 Cautions 注意事项 15
4. Handling Precautions 产品使用注意事项 16
4.1 Handling Precautions 产品使用注意事项 16

1. Description 产品介绍

1.1 General Description 产品描述

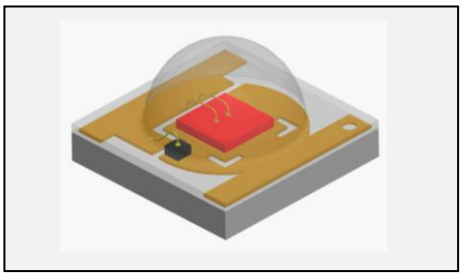

This production use the ceramics and Silicone molding package，outline size 3.45X3.45X1.95mm
本产品采用陶瓷和硅胶 molding 封装，产品尺寸：3.45X3.45X1.95mm。

1.2 Features 产品特征

► Ceramic and silicone molding package.陶瓷和硅胶molding封装

► Viewing angle:120°.发光角度：120°

► Suitable for all SMT assembly and solder process.适用于所有的SMT组装和焊接工艺

► Available on tape and reel.适用于载带及卷轴

► Moisture sensitivity level: Level 3.防潮等级 Level3

► RoHS compliant.满足RoHS要求

1.3 Application 产品应用

► Flower production. 花卉生产

► Tissue culture. 组织培养

► Plant factory. 植物工厂

► Refreshment. 冰箱保鲜

► General use.其他应用

1.4 Package Dimension 封装尺寸

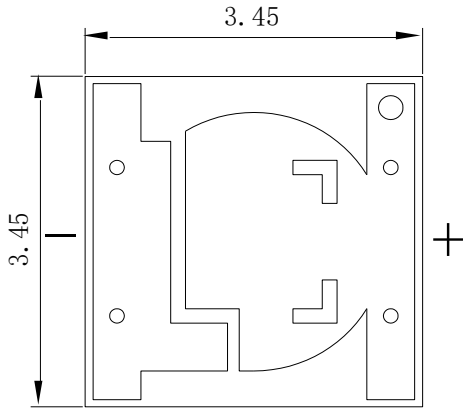

Fig.1-1 Top view 正面视图

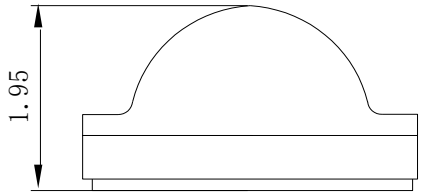

Fig.1-2 Side view 侧面视图

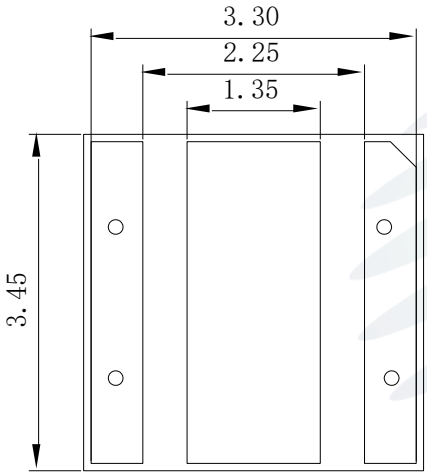

Fig.1-3 Bottom view 背面视图

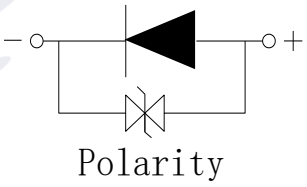

Fig.1-4 Polarity 极性

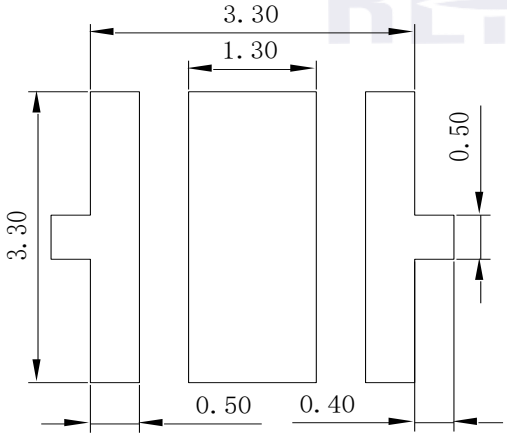

Fig.1-5 Soldering patterns 推荐焊盘

Notes 备注：

1. All dimensions units are millimeters. 所有尺寸标注单位为毫米
2. All dimensions tolerances are ±0.2mm unless otherwise noted.除特别标注外，所有尺寸公差为±0.2 毫米

1.5 Product Parameters 产品参数

Table 1-1 Electrical / Optical Characteristics at Ts=25°C 电性与光学特性

Item 项目	Symbol 符号	Test Condition 测试条件	Code 代码	Value Min. （最小值）	Value Typ （典型值）	Value Max. （最大值）	Unit 单位
Forward Voltage （正向电压）	V_F	I_F=700mA	B05	1.8	---	2.0	V
			B06	2.0	---	2.2	
			B07	2.2	---	2.4	
			B08	2.4	---	2.6	
Reverse Current （漏电流）	I_R	V_R=5V	---	---	---	5	uA
Total radiant flux (辐射功率)	Φ_e	I_F=700mA	1B33	450	---	560	mW
			1B34	560	---	710	
			1B35	710	---	900	
			1B36	900	---	1100	
Peak wavelength (峰值波长)	λp	I_F=700mA	R10	655	---	660	nm
			R11	660	---	665	
PPF (光合光子通量)	BPF/W	I_F=700mA	---	3.5	3.7	3.8	μmol/s
Eff(光效)	PPF/W	I_F=700mA	---	2.0	2.2	2.3	μmol/s/W
Viewing Angle （发光角度）	2θ1/2	I_F=700mA	---	---	120	---	deg
Thermal Resistance. （热阻）	R_{THJ-S}	I_F=700mA	---	---	6	---	℃/W

Table 1-2 Absolute Maximum Ratings at Ts=25°C 绝对最大值

Parameter（参数）	Symbol（符号）	Rating（值）	Units（单位）
Maximum Power Dissipation（最大功耗）	P_D	1.8	W
Peak Forward Current（峰值电流）	I_{FP}	700	mA
Reverse Voltage（反向电压）	V_R	5	V
Electrostatic Discharge (HBM)（静电）	E_{SD}	2000	V
Operating Temperature（操作温度）	T_{OPR}	-40 ~ +85	℃
Storage Temperature（储存温度）	T_{OPR}	-40 ~ +100	℃
Junction Temperature（结温）	T_J	105	℃

Notes 备注：

1. 1/10 Duty cycle, 0.1ms pulse width. 脉宽0.1ms,占空比1/10.

2. The above forward voltage measurement allowance tolerance is ±0.1V. 以上所示电压测量误差 ±0.1V.

3. The above wavelenth measurement allowance tolerance is ±2nm. 以上所示波长测量误差± 2nm.

4. The above radiation flux measurement allowance tolerance ±10%. 上述辐射功率的测试允许公差为±10%.

5. Care is to be taken that power dissipation does not exceed the absolute maximum rating of the product. 使用功率不能超过规定的最大值。

6. All measurements were made under the standardized environment of Refond. 所有测试都是基于瑞丰现有的标准测试平台。

7.When the LEDs are in operation the maximum current should be decided after measuring the package temperature, junction temperature should not exceed the maximum rate. LED 使用的最大电流需要根据散热条件确定，结温不能超过最大值。

8. ESD yield is over 90% at 2000V ESD (HBM). ESD protection during products handing is needed. 90%的LED通过人体模式ESD2000V 测试，在操作时请注意静电防护。

1.6 Typical optical characteristics curves 典型光学特性曲线

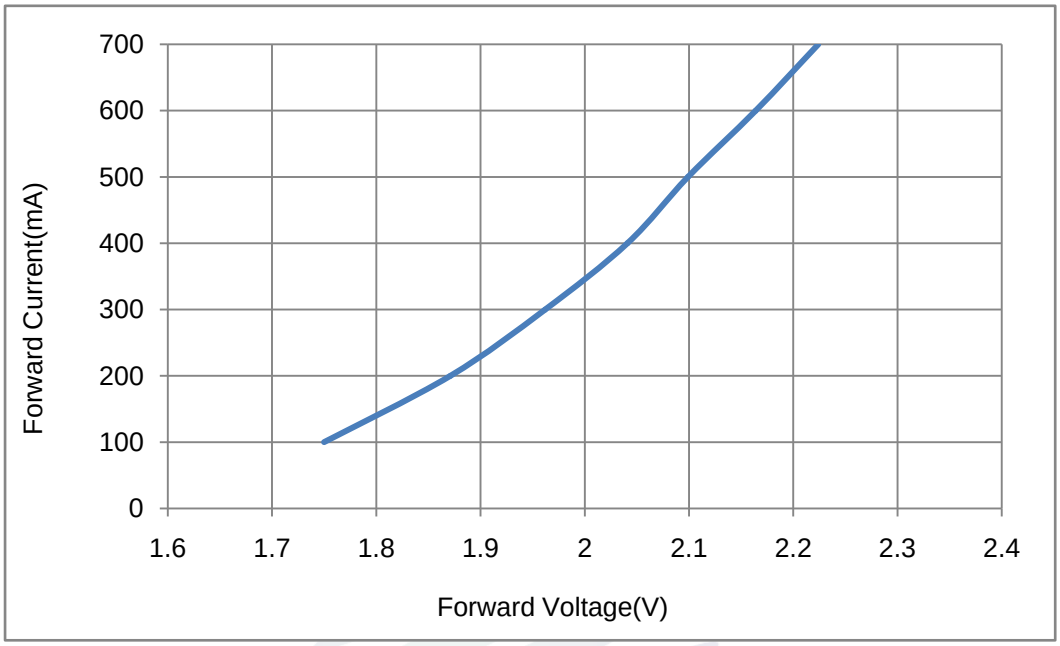

Fig.1- Forward Voltage Vs. Forward Current 伏安特性曲线

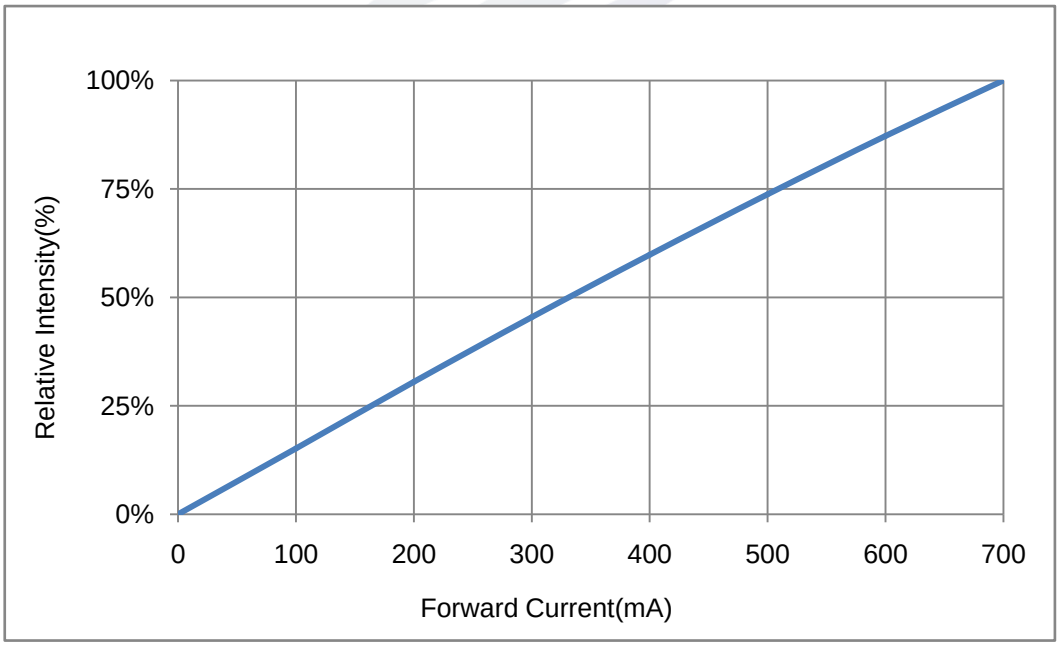

Fig.2- Forward Current Vs. Relative Power 正向电流与相对光功率特性曲线

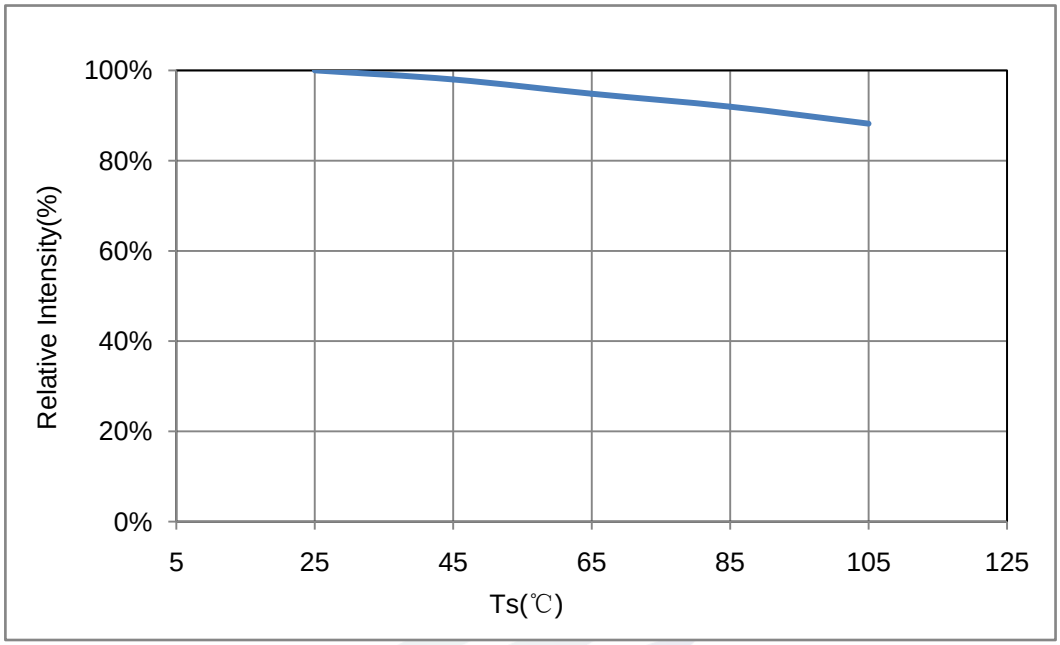

Fig.3-Solder Temperature VS. Relative Power 焊盘温度与相对光功率曲线

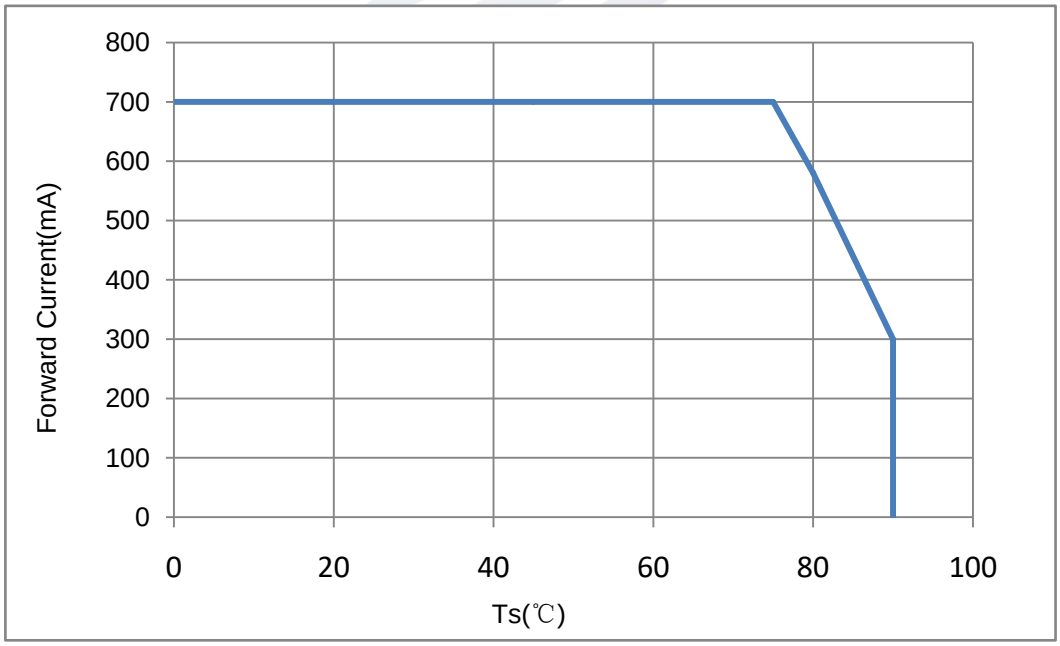

Fig.4-Ts Temperature VS. Forward Current 焊盘温度与正向电流特性曲线

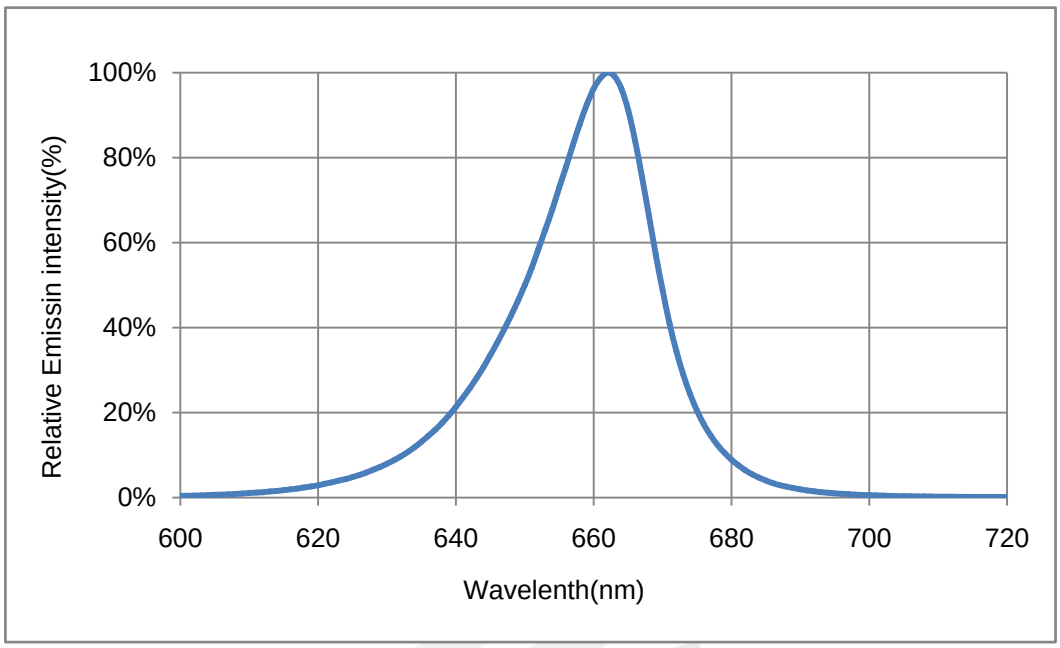

Fig.5-Spectrum Distribution 光谱分布特性曲线

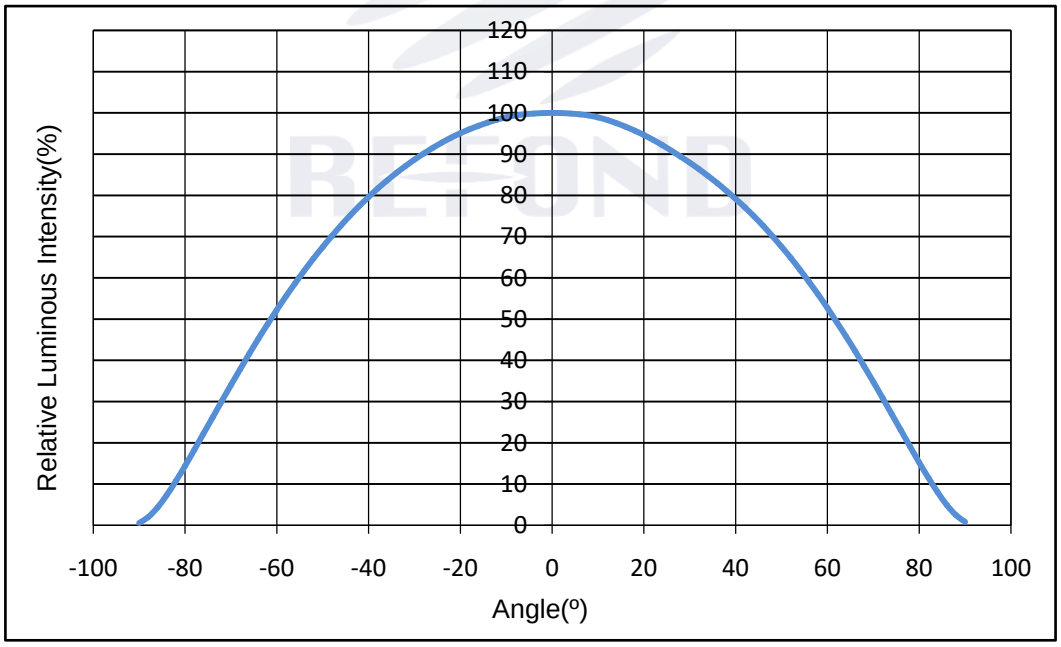

Fig.6- Radiation Diagram 辐射特性曲线

2. Packaging 产品包装

2.1 Packaging Specification 包装规格

Package:1000pcs/reel.包装每卷 1000pcs。

2.1.1 Carrier Tape Dimension 载带尺寸

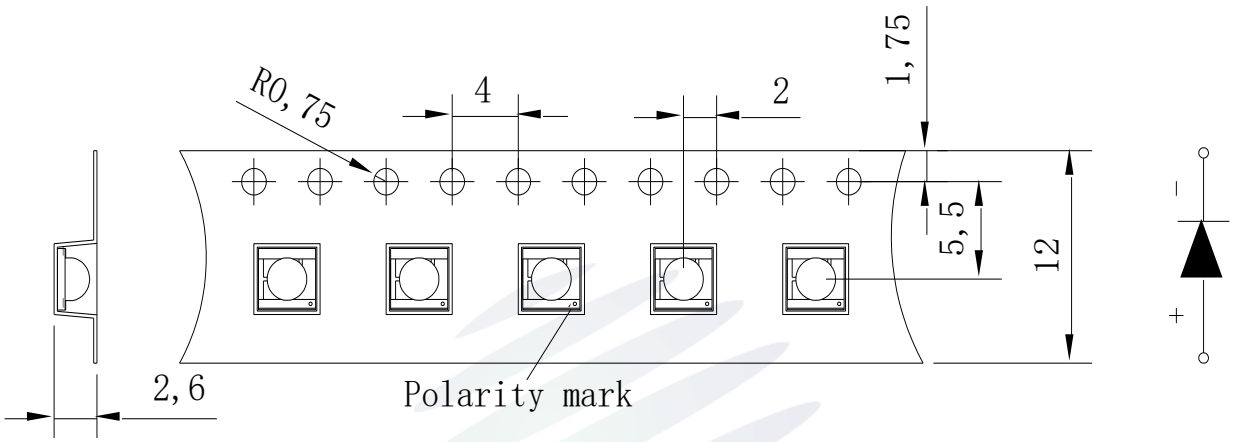

Fig.2-1 Carrier Tape Dimension 载带尺寸

2.1.2 Reel Dimension 卷盘尺寸

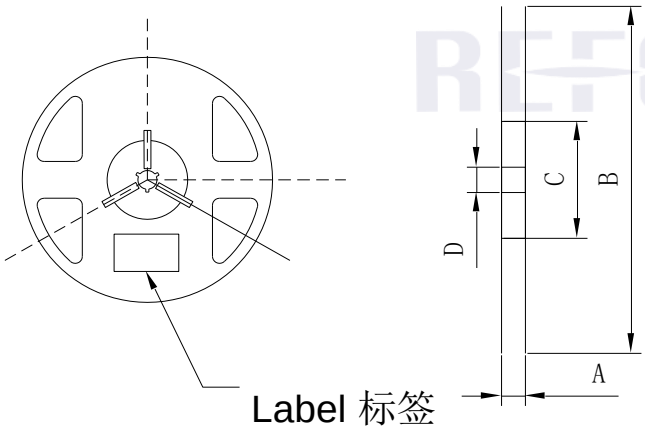

Fig.2-2 Reel Dimension 卷盘尺寸

Table 2-1 Reel Dimension 卷盘尺寸

A	12±0.1mm
B	178±1mm
C	60±1mm
D	13.0±0.5mm

Notes 备注：

The tolerances unless mentioned ±0.1mm. Unit : mm注：未注公差为±0.1毫米，尺寸单位：毫米。

2.1.3 Label Form Specification 标签规格

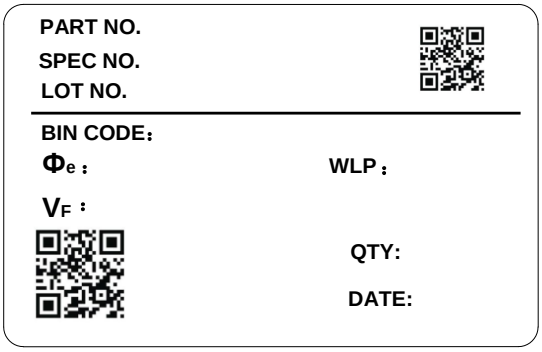

Fig. 2-3 Label Form Specification 标签规格

Table 2-2 Label Form Specification 标签规格

PART NO.	Part Number 品名
SPEC NO.	Spec Number 规格
LOT NO.	Lot Number 批次号
BIN CODE	Bin Code 参数代码
Φ_e	Radiation flux 辐射功率
V_F	Forward Voltage 正向电压
WLP	Wavelength 波长代码
QTY	Packing Quantity 数量
DATE	Made Date 生产日期

2.2 Moisture Resistant Packing 防潮包装

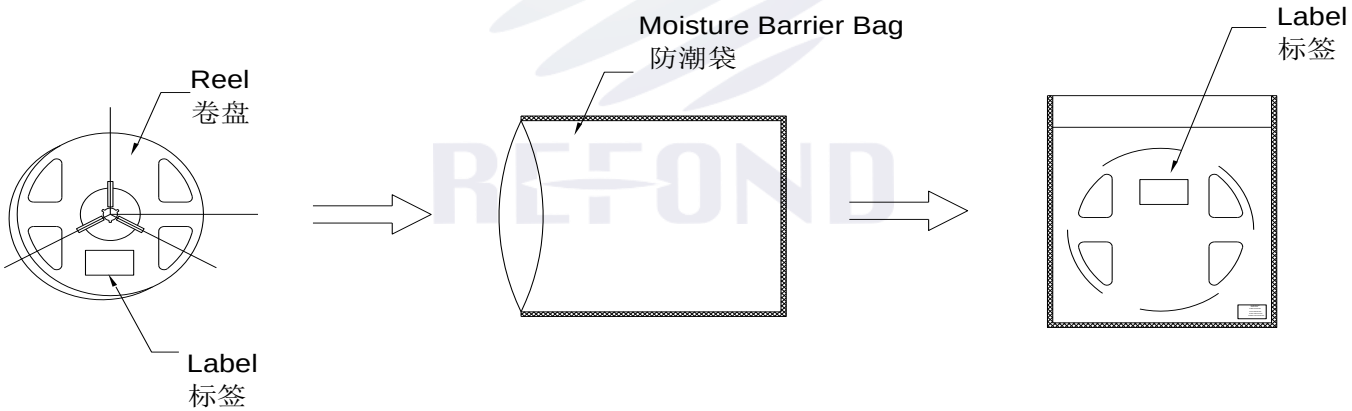

Fig.2-4 Moisture Resistant Packing Process 防潮包装过程

2.3 Cardboard Box 包装纸箱

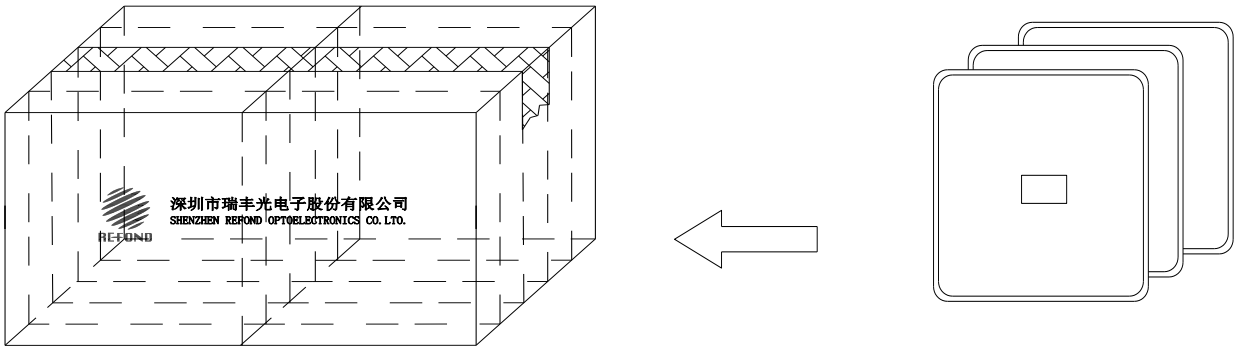

Fig.2-5 Cardboard Box 包装纸箱

2.4 Reliability Test Items And Conditions 信赖性测试项目及条件

Table 2-3 Reliability Test Items And Conditions 信赖性测试项目及条件

Test Items 项目	Ref.Standard 参考标准	Test Condition 测试条件	Time 时间	Quantity 数量	Ac/Re 接收/拒收
Reflow 回流焊	JESD22-B106	Temp:260℃max T=10 sec	3times.	10Pcs.	0/1
Thermal Shock 冷热冲击	JESD22-A106	-40℃ 15min ↑↓10s 100℃ 15min	100 Cycles	10Pcs.	0/1
Life Test 常温老化	JESD22-A108	T_a=25℃ IF=700mA	1000Hrs.	10Pcs.	0/1

2.5 Criteria For Judging Damage 失效判定标准

Table 2-4 Criteria For Judging Damage 失效判定标准

Test Items 项目	Symbol 符号	Test Condition 测试条件	Criteria For Judgement 判定标准	
			Min. 最小	Max. 最大
Forward Voltage 正向电压	V_F	IF=700mA	-	U.S.L*)x1.1
Reverse Current 反向电流	I_R	V_R = 5V	-	U.S.L*)x2.0
Total radiant flux 光功率	Φ_e	IF=700mA	L.S.L*)x0.7	-

Notes 备注：

1.U.S.L: Upper standard level 规格上限 L.S.L: Lower standard level 规格下限

2. The above reliability tests is based on the verification of a single/strip LED of Refond's existing experimental platform, the reliability experiment was taken under good heat dissipation conditions. when customers applies the LED to the series and parallel circuit, should take consideration of all the factors such as the current, voltage distribution, heat dissipation and others. 以上可靠性测试是基于瑞丰现有实验平台单颗/条 LED 在良好散热条件验证下的结果。客户端将 LED 应用于串、并联线路时，需自行评估电流、电压分配、散热等问题。

3.The technical information shown in the data sheets is limited to the typical characteristics and circuit examples of the referenced products. It does not constitute the warranting of industrial property nor the granting of any license. 以上技术数据仅为产品的典型值，只作为参考，不作为任何应用条件及应用方式的保证。

3. SMT Reflow Soldering Instructions SMT 回流焊说明

3.1 SMT Reflow Soldering Instructions SMT 回流焊说明

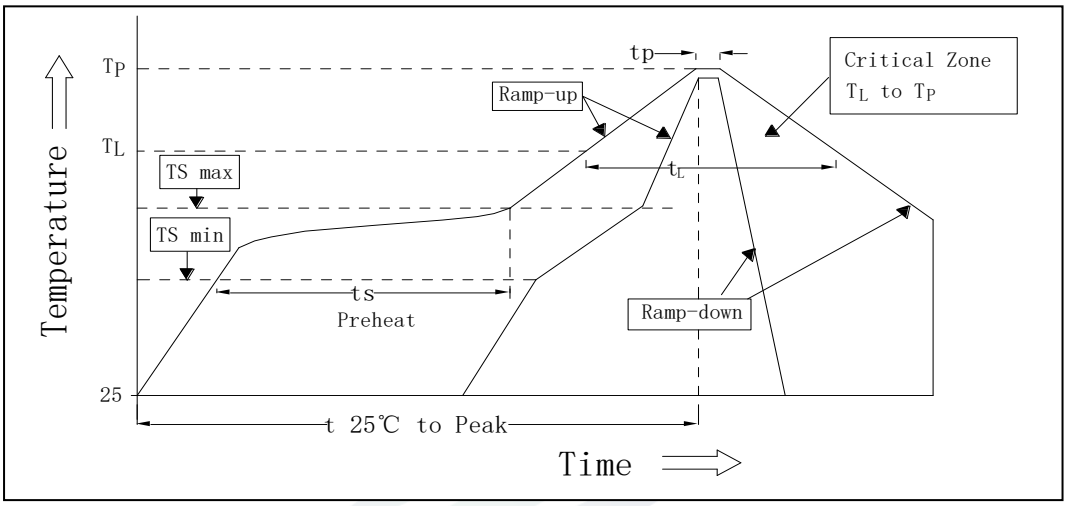

Fig.3-1 SMT Reflow Soldering Instructions　SMT 回流焊说明

Table 3-1 SMT Reflow Soldering Instructions　SMT 回流焊说明

Average temperature rise speed平均升温速度（Tsmax　至T_P）	Max 3 °C/ s 最高3 °C/秒
Preheating: minimum temperature预热：最低温度 (Tsmin)	150 °C
Preheating: Max temperature预热：最高温度 (Tsmax)	200 °C
Preheating: Time预热：时间（Tsmin　至Tsmax）	60s-120s　60 - 120秒
Time limited to maintain high temperature: the temperature限时维持高温：温度 (T_L)	217 °C
Time limited to maintain high temperature: The Time　限时维持高温：时间 (t_L)	Max 60s　最多60秒
Peak /Classification of temperature:峰值 / 分类温度 (T_P)	260 °C
Time limit classification of peak temperature time限时峰值分类温度：时间（t_p）	Max 10s　最多10秒
Hold time within 5 °C with the actual peak temperature (TP) 与实际峰值温度 (T_P) 相差 5 °C 以内的保持时间	Max 30s　最多30秒
Cooling speed　降温速度	Max 6 °C/ s　最高6 °C/秒
Needed time from 25 °C to Tp　25 °C 升至峰值温度所需时间	Max 8 minutes 最多8分钟

Notes 备注：

(1)Reflow soldering should not be done more than twice. If more than 24 hours between the two solderings，LED will be damaged. 回流焊次数不可以超过两次，两次回流焊的时间间隔如果超过24小时，LED可能由于吸湿而损坏。

(2)When soldering，do not put stress on the LEDs during heating.当焊接时，不要在材料受热时用力压胶体表面。

3.1.1 Soldering Iron 烙铁焊接

(1) When do soldering by hand, keep the temperature of iron below less 300℃ less than 3 seconds. 当手工焊接时,烙铁的温度必须小于300℃，时间不可超过3秒。

(2) Soldering by hand should be done only one time.手工焊接只可焊接一次。

3.1.2 Repairing 修补

Repairing should not be done after the LEDs have been soldered. When repairing is unavoidable,a double-head soldering iron should be used (as below figure). It should be confirmed in advance whether the characteristics of LEDs will or not be damaged by repairing.

LED回流焊后不应该修复，当必须修复时，必须使用双头烙铁，而且事先应确认此种方式会不会损坏LED本身的特性。

3.1.3 Cautions 注意事项

(1) The encapsulated material of the LEDs is silicone. Therefore the LEDs have a soft surface on the top of package. The pressure to the top surface will be impacted on the reliability of the LEDs. Precautions should be taken to avoid the strong pressure on the encapsulated part. So when usethe picking up nozzle, the pressure on the silicone resin should be proper. LED封装胶为硅胶，表面较软，用力按压胶体表面会影响LED可靠性，因此应有预防措施避免在按压器件，当使用吸嘴时，胶体表面的压力应是恰当的。

(2) Components should not be mounted on warped (non coplanar) portion of PCB. After soldering, do not warp the circuit board.LED 灯珠不要焊接在弯曲的 PCB 板上，焊接之后，也不要弯折线路板。

(3) Do not apply mechanical force or excess vibration during the cooling process to normal temperature after soldering. Do not rapidly cool device after soldering.回流焊之后冷却过程中，不要对材料实加外力，也不要有震动，回流焊后，不要采用激剧冷却的方式。

4. Handling Precautions 产品使用注意事项

4.1 Handling Precautions 产品使用注意事项

(1) LED operating environment and sulfur element composition cannot be over 100PPM in the LEDmating usage material. This is provided for informational purposes only and is not a warranty or endorsement.LED 工作环境及与 LED 适配的材料中硫元素及化合物成份不可超过 100PPM.这只是一个建议，不作任何品质担保。

(2) In order to prevent ex-ternal material from getting into the inside of LED, which may cause the malfunction of LED, the single content of Bromine element is required to be less than 900PPM,the single content of Chlorine elementis required to be less than 900PPM, the total content of Bromine element and Chlorine element in the external materials of the application products is required to be less than 1500PPM. This is provided for informational purposes only and is not a warranty or endorsement.为了防止外界物质进入 LED 内部以造成 LED 的损伤，所处环境及所用套件等等，单一的溴元素含量要求小于 900PPM，单一氯元素含量要求小于 900PPM，溴元素与氯元素总含量必须小于 1500PPM. 这只是一个建议，不作任何品质担保。

(3) VOCs (Volatile organic compounds) emitted from materials used in the construction of fixtures can penetrate silicone encapsulants of LEDs and discolor when exposed to heat and photonic energy. The result can be a significant loss of light output from the fixture. Knowledge of the properties of the materials selected to be used in the construction of fixtures can help prevent these issues. Refond advises against theuse of any chemicals or materials that have been found or are suspected to have an adverse affect on device performance or reliability. To verifycompatibility, Refond recommends that all chemicals and materials be tested in the specific application and environment for which they are intended tobe used. Attaching LEDs, do not use adhesives that outgas organic vapor. 应用套件中的挥发性物质会渗透到 LED 内部，在通电产生光子及热的条件下，会导致 LED 变色，进而造成严重光衰，提前了解套件材料能够避免产生这些问题。瑞丰反对使用任何对 LED 器件的性能或者可靠性有害的物质或材料，不管这些材料是已经证实了的还是仅仅怀疑有害。针对特定的用途和使用环境，瑞丰建议对所有的物质和材料进行相容性的测试。在贴装 LED 时候，不要使用能产生有机挥发性气体的粘结剂。

(4) Handle the component along the side surface by using forceps or appropriate tools; Do not directlytouch or Handle the silicone lens surface, it may damage the internal circuitry.通过使用适当的工具从材料侧面夹取，不可直接用手或尖锐金属压胶体表面，它可能会损坏内部电路。

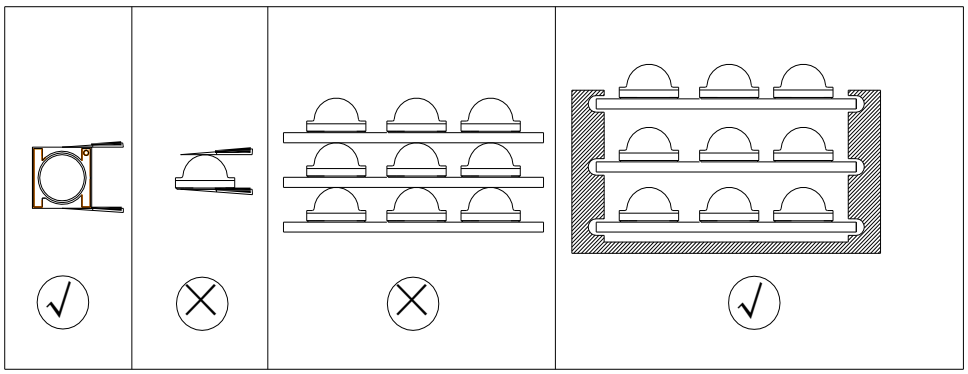

Fig 4-1 Operate Method 操作方法

(5) In designing a circuit, the current through each LED can not exceed the absolute maximum rating specified for each LED. In the meanwhile,resistors for protection should be applied, otherwise slight voltage shift will cause big current change,burn out may happen. The driving circuit must be designed to allow forward voltage only when it is ON or OFF.If the reverse voltage is applied to LED, migration can be generated resulting in LED damage. 设计电路时，通过 LED 的电流不能超过规定的最大值，同时，还需使用保护电阻，否则，微小的电压变化将会引起较大电流变化，可能导致产品损毁。电路设计必须保证只有在开启或者关闭的时候出现正向电压的变化，不要施加反压，否则会损坏 LED。

(6) Thermal Design is paramount importance because heat generation may result in the Characteristics decline,such as brightness decreased,Color change and so on.Please consider the heat generation of the LEDs when making the system design.LED 容易因为自身的发热和环境的温度改变而改变，温度升高会降低 LED 发光效率，影响发光颜色，所以在设计时应充分考虑散热问题。

(7) Compared to standard encapsulants, silicone is generally softer, and the surface is more likely to attract dust, requiring special care during processing. In cases where a minimal level of dirt and dust particles cannot be guaranteed, a suitable cleaning solution must be applied to the surface after the soldering of components. Refond suggests using isopropyl alcohol for cleaning. In case other solvents are used, it must be assured that these solvents do not dissolve the package or resin. Ultrasonic cleaning is not recommended. Ultrasonic cleaning may cause damage to the LED. 与其他封装胶相比，硅胶通常较软，表面易吸附脏物，应用时应特别注意，当对产品洁净度要求较高时，回流焊以后需要采用恰当的清洗方式，我们推荐用异丙醇作清洗剂，如需要用到其他清洗剂，必须保证不会破坏封装体，超声清洗可能会对 LED 带来损害，不推荐这种清洗方式。

Table 4-1Storage 储存

Conditions 种类		Temperature 温度	Humidity 湿度	Time 时间
Storage 储存	Before Opening Aluminum Bag 拆包前	≤30℃	≤75%	Within 1 Year From Date 一年内
	After Opening Aluminum Bag 拆包后	≤30℃	≤60%	24hours 24小时
Baking 烘烤		60±5℃	-	≥24hours 大于24小时

(8) If the moisture absorbent material（silica gel）has faded away or the LEDs have exceeded the storage time, baking treatment should be performed after unpacking and based on the following condition（65±5）℃ for above 24 hours.如果干燥剂或包装失效，或者产品不符合以上有效储存条件，需拆包后进行烘烤，烘烤条件：60±5℃，大于 24 小时。

If the package is flatulence or damaged, please notify the sales staff to assist.如果包装胀气或者破损，请通知销售人员协助处理。

(9)Similar to most Solid state devices; LEDs are sensitive to Electro-Static Discharge (ESD) and Electrical Over Stress (EOS). 像其他的半导体电子器件一样，LED 对静电过流击穿非常敏感，需要做好防护。

(10) When using this product, you need to take good care to prevent it from causing harm to eyes and human body. 使用本产品时需要做好防护，防止本产品对眼睛及人体造成伤害。

(11) Other points for attention, please refer to our relevant information.其它注意事项请参照瑞丰相关资料。

Version History/修订历史

Date日期	Revisor修订者	Version版本	Verifier审核	Remarks备注
2019-06-10	刘俊	E0	吴慧文	新制
2020-05-20	成鹏	E1	刘俊	参数档位细分

www.refonduvled.com

瑞豐光電 REFOND

Declare 申明

This specification is written both in English and in Chinese and the latter is formal.

产品规格书以中英文方式书写，若有冲突以中文版本为准。