Specification

规格书

Customer Name : _____
客户名称

Customer P/N : _____
客户品号

Refond P/N : RF-GNRA30TS-CF
公司型号

Sending Date: _____
供货日期

Confidential

☐Technical Reference 技术参考			☐Sample 样品		■Mass Product 量产供货
Customer approval 客户审核			Refond approval 瑞丰审核		
Approval 核准	Audit 确认	Confirmation 制作	Approval 核准	Audit 确认	Confirmation 制作
☐Qualified 接受	☐Disqualified 不接受		Date ： 日期：		

深圳市瑞丰光电子股份有限公司 承认专用章

Address: 1-8th Floor, Building #1,10th Industrial Zone, Tian Liao Community, Gong Ming Area, Guang Ming New District, Shenzhen, China.
地址： 深圳市光明新区公明办事处田寮社区第十工业区 1 栋一至八楼
Tel/电话：0755-66839118 **Fax/传真：** 0755-66839300 **Web/网址：** www.refond.com

RF-GNRA30TS-CF

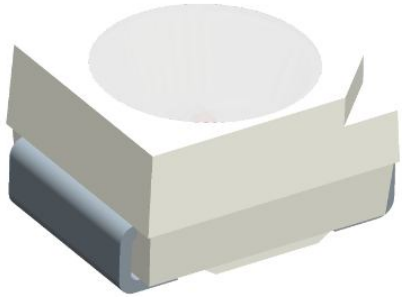

Features 特征

- PLCC-2 Package. 垂直型表贴封装
- Extremely wide viewing angle. 发光角度大
- Suitable for all SMT assembly and solder process. 适用于所有的SMT组装和焊接工艺
- Available on tape and reel. 适用于载带及卷轴
- Moisture sensitivity level: 3. 防潮等级：3
- Package:2000pcs/reel. 包装：2000颗/卷
- RoHS compliant. RoHS认证

Description 描述

- The Green source color devices are made with InGaN on Substrate Light Emitting Diode

  绿光LED由InGaN三种元素芯片激发而成

Applications 应用

- Optical indicator.光学指示
- Indoor display.室内显示
- Landscape lighting,lamp belt. 景观照明，灯带等
- General suitable applications.其他适合的应用

Confidential

深圳市瑞丰光电子股份有限公司
承 认 专 用 章

Package Dimension 封装尺寸

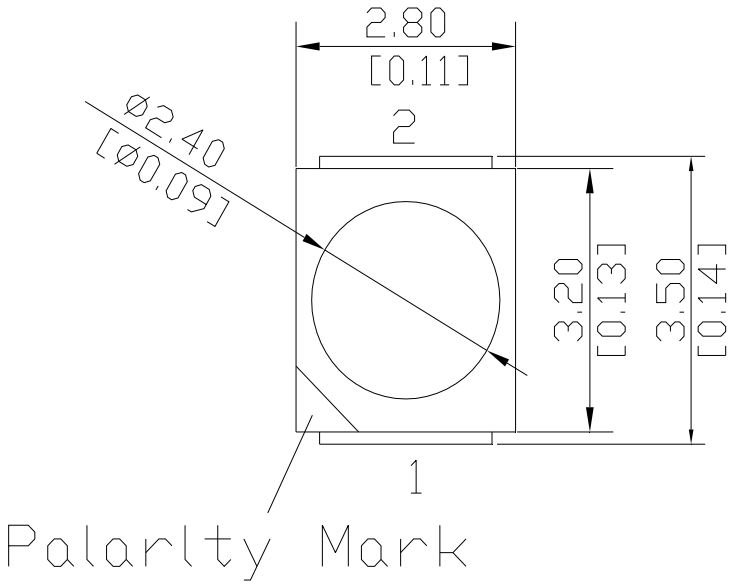

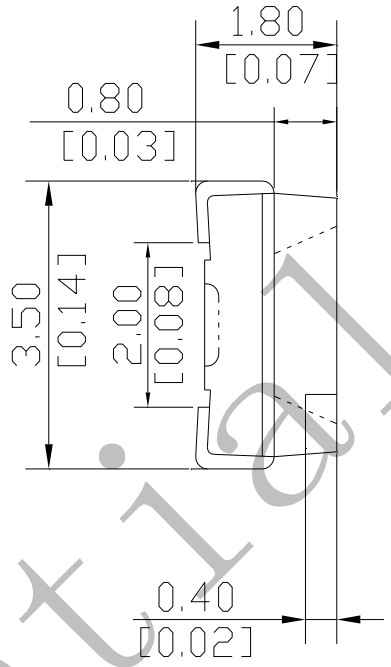

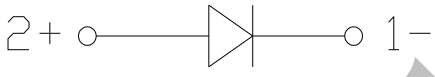

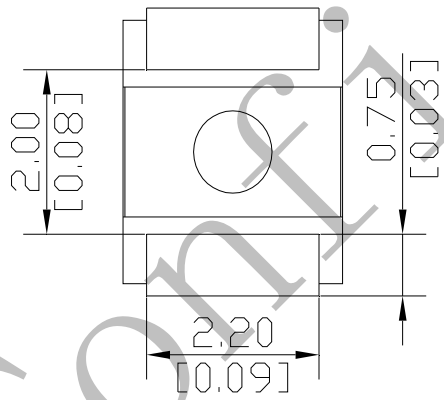

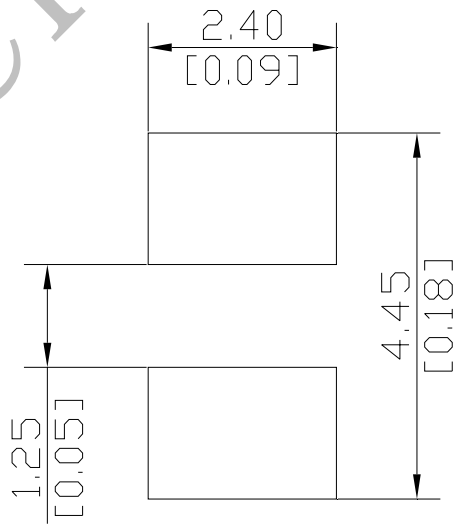

公差X.XX:±0.05mm

Recommended Solder

Confidential

外形尺寸：**3.5*2.8*1.8mm**

深圳市瑞丰光电子股份有限公司
承 认 专 用 章

NOTES:备注

1.All dimensions units are mm. (所有尺寸标注单位为毫米)

2.All dimensions tolerances are ±0.2mm unless otherwise noted. (除特别标注外，所有尺寸允许公差为±0.2 毫米)

Electrical / Optical Characteristics at Ts=25°C 电性与光学特性

Item 项目		Symbol 符号	test condition 测试条件	Value			unit 单位
				Min.	Max.	Typ.	
Forward Voltage	Rank G1	Vf	IF=20mA	2.8	2.9	3.1	V
	Rank G2			2.9	3.0		V
	Rank H1			3.0	3.1		V
	Rank H2			3.1	3.2		V
	Rank I1			3.2	3.3		V
	Rank I2			3.3	3.4		V
	Rank J1			3.4	3.5		V
Dominant wavelength	Rank D20	Wld	IF=20mA	517.5	520.0	521.5	nm
	Rank E10			520.0	522.5		nm
	Rank E20			522.5	525.0		nm
	Rank F10			525.0	527.5		nm
	Rank F20			527.5	530.0		nm
Luminous intensity	Rank 1CN	IV	IF=20mA	900	1200	1700	mcd
	Rank M10			1200	1500		mcd
	Rank M20			1500	1800		mcd
	Rank N10			1800	2300		mcd
Reverse Current		IR	VR=5V	---	10	---	uA
Viewing Angle		2Θ1/2	IF=20mA	---	---	120	Deg
Thermal resistance		Rth(j-s)	IF=20mA	---	---	97	℃/W

Absolute Maximum Ratings at Ts=25°C 最大极限参数值

Parameter 参数	Symbol（符号）	Rating（值）	Units（单位）
Power Dissipation 功耗	Pd	105	mW
Forward Current 正向电流	IF	30	mA
Peak Forward Current 峰值电流	IFP	100	mA
Reverse Voltage 反向电压	VR	5	V
Electrostatic Discharge(HBM) 静电	ESD	2000	V
Operating Temperature 操作温度	Topr	-40 ~ +85	℃
Storage Temperature 储存温度	Tstg	-40 ~ +100	℃
Junction temperature 结温	Tj	100	℃

Note: 备注

1 Note: 1. 1/10 Duty cycle, 0.1ms pulse width. 脉宽0.1ms, 周期1/10.

2. The above forward voltage measurement allowance tolerance is 0.1V. 以上所示电压测量误差0.1V.

3. The above wavelength measurement allowance tolerance is ±1nm. 以上所示波长测量误差±1nm.

4. The above luminous intensity measurement allowance tolerance ±10%. 上述发光强度的测试允许公差为±10%.

5. Care is to be taken that power dissipation does not exceed the absolute maximum rating of the product. 使用功率不能超过规定的最大值。

6.When the LEDs are in operation the maximum current should be decided after measuring the package temperature, junction temperature should not exceed the maximum rate. LED使用最大电流需根据散热条件确定，结温不能超过最大值。

深圳瑞丰光电子股份有限公司 承认专用章

Confidential

Typical Optical Characteristics Curves 典型光学特性曲线

Fig.1-Forward Voltage Vs. Forward Current
伏安特性曲线

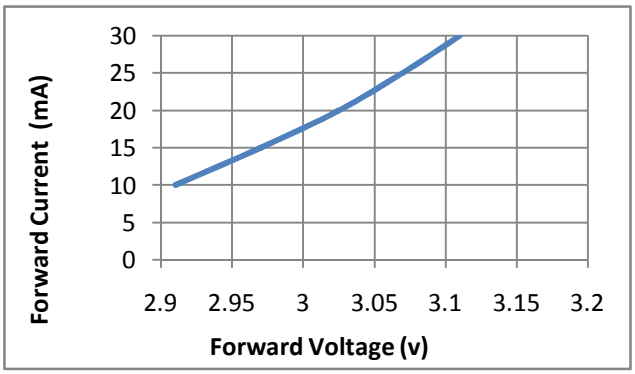

Fig.2-Forward Current Vs. Relative Intensity
正向电流与相对光强特性曲线

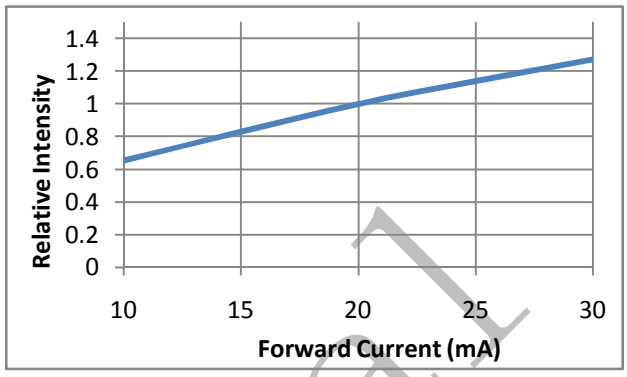

Fig.3-Pin Temperature Vs. Relative Intensity
引脚温度与相对光强特性曲线

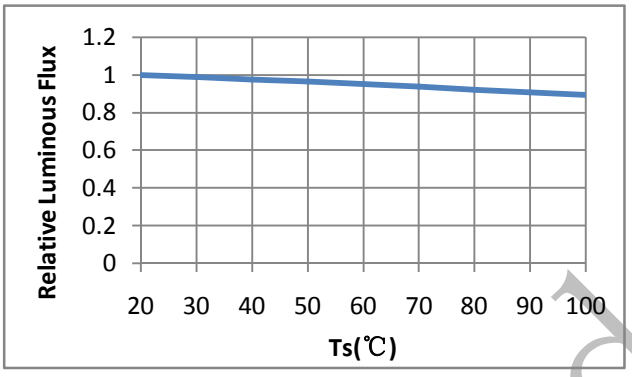

Fig.4-Pin Temperature Vs. Forward Current
引脚温度与正向电流特性曲线

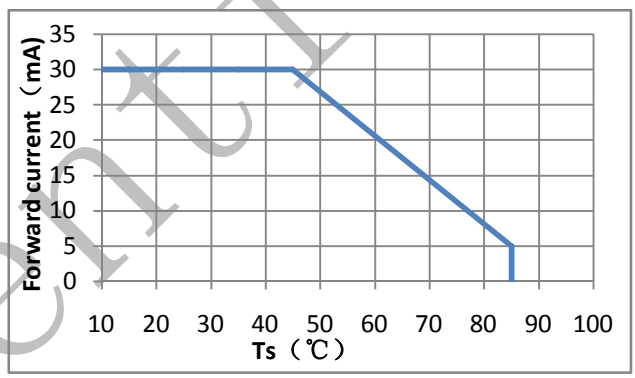

Fig.5-Forward Voltage Vs.Pin Temperature
电压与引脚温度特性曲线

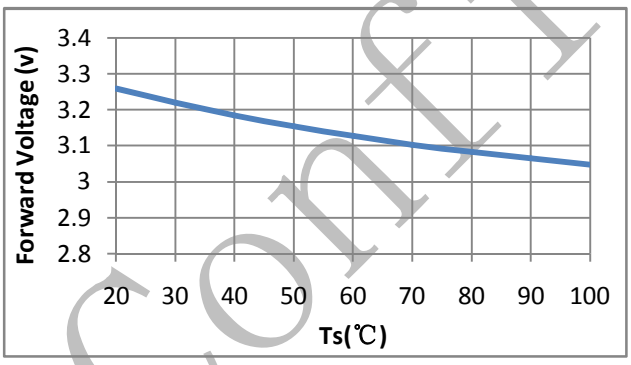

Fig.6- Radiation diagram
辐射特性曲线

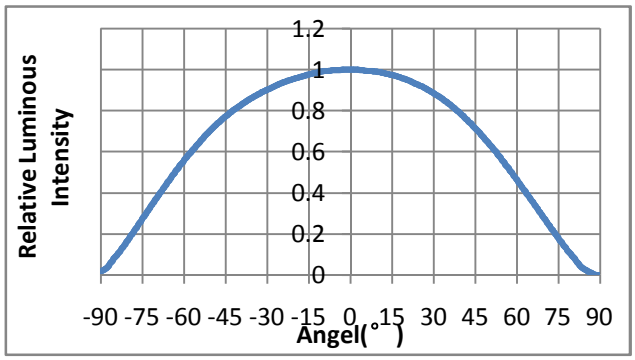

Fig.7- Spectrum Distribution
光谱分布特性曲线

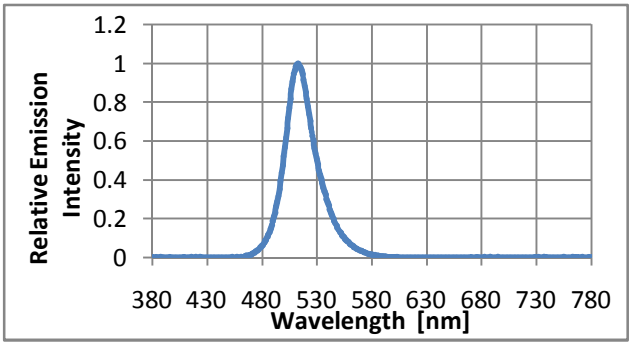

Note:备注

All the parameters and standards in the specification are based on Refond standard test platform.

规格书中所有参数和标准都是基于瑞丰的标准测试平台。

瑞丰光电子股份有限公司 承认专用章

Confidential

Packaging Specifications 包装规格

■ Carrier Tape Dimensions 载带尺寸

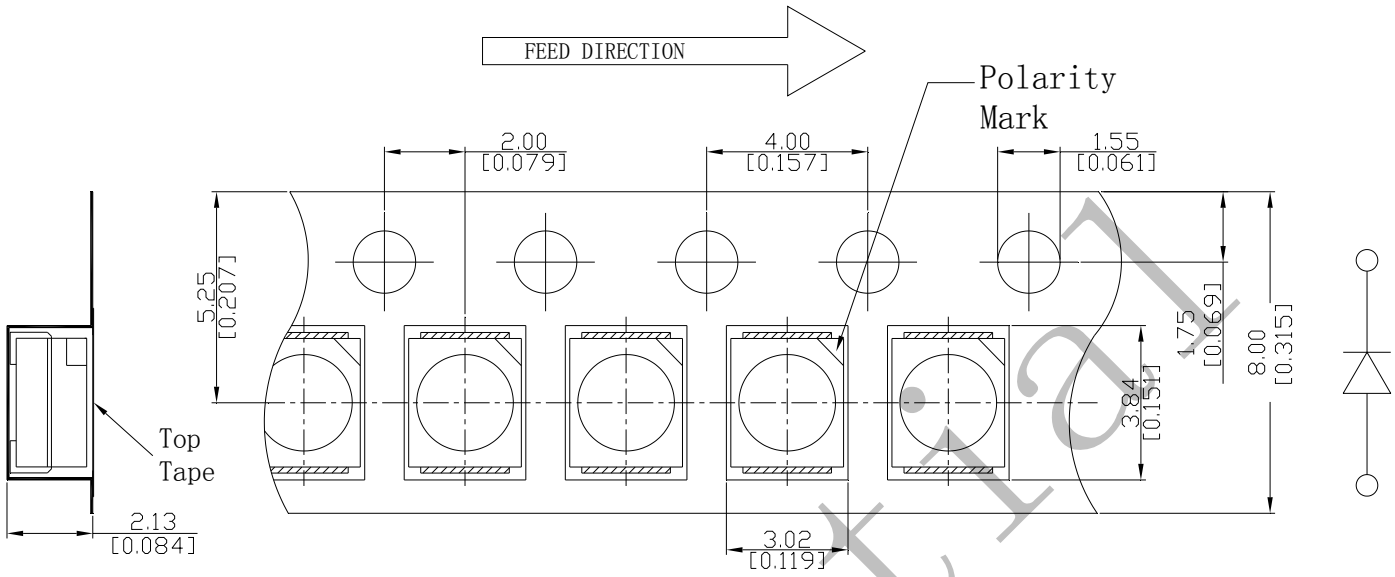

■ Reel Dimension 卷盘尺寸

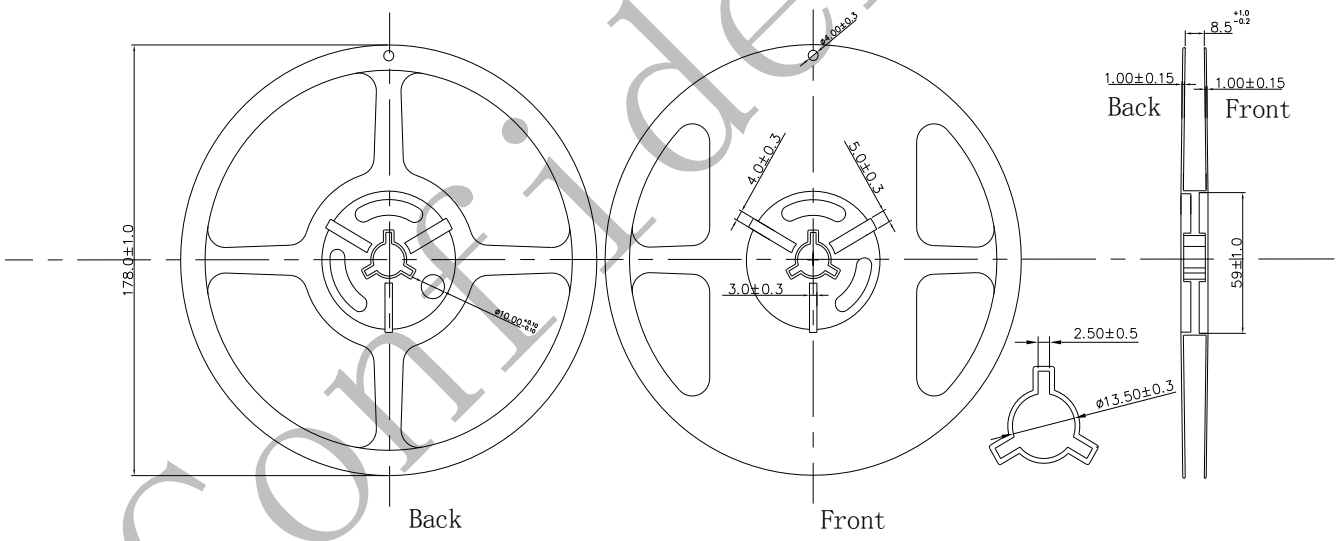

深圳市瑞丰光电子股份有限公司
承 认 专 用 章

Note:备注

The tolerances unless mentioned ±0.1mm. Unit : mm 注：未注公差为±0.1毫米，尺寸单位：毫米。

Confidential

■ Label Form Specification 标签规格

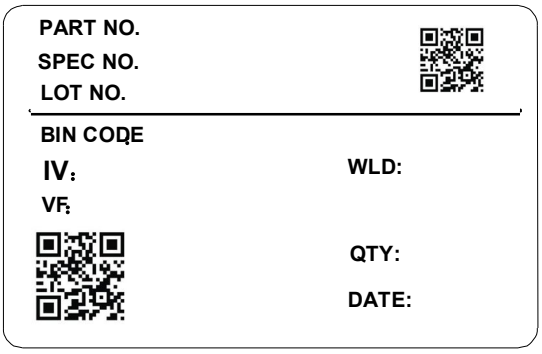

PART NO.	Part Number
SPEC NO.	Spec Number
LOT NO.	Lot Number
BIN CODE	Bin Code
IV	Luminous intensity
WLD	Wavelength Bin
VF	Forward Voltage
QTY	Packing Quantity
DATE	Made Date

■ Moisture Resistant Packing Process 防潮包装过程

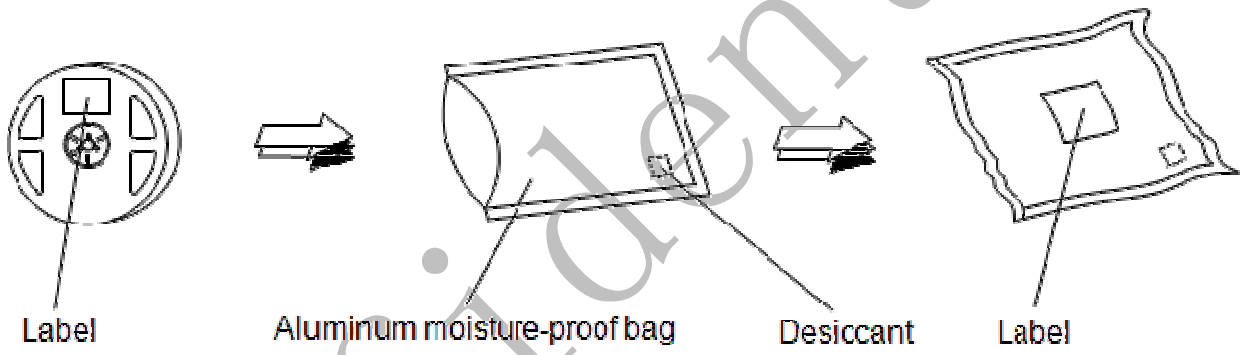

■ Cardboard Box 纸箱

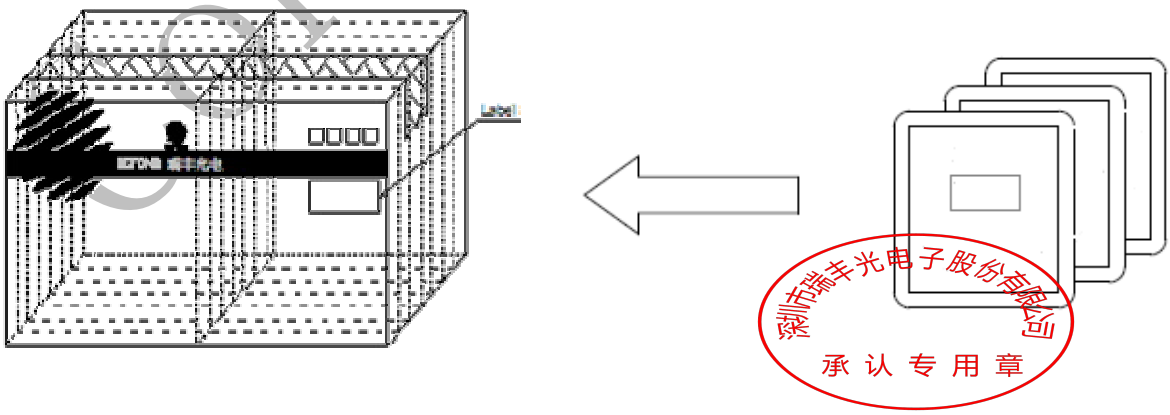

Confidential

Reliability Test Items And Conditions 可靠性测试项目及条件

Test Items 项目	Ref.Standard 参考标准	Test Condition 测试条件	Time 时间	Quantity 数量	Ac/Re 接收/拒收
Reflow 回流焊	JESD22-B106	Temp:260℃max T=10 sec	2times.	10Pcs.	0/1
Thermal Shock 冷热冲击	JESD22-A106	-40℃ 15min ↑↓10sec 100℃ 15min	100Cycles	10Pcs.	0/1
High Temperature Storage 高温保存	JESD22-A103	Temp.:100℃	1000Hrs.	10Pcs.	0/1
Low Temperature Storage 低温保存	JESD22-A119	Temp.:-40℃	1000Hrs.	10Pcs.	0/1
Life Test 常温老化	JESD22-A108	Ta=25℃ IF=20mA	1000Hrs.	10Pcs.	0/1
High Temperature High Humidity Life Test 高温高湿老化	JESD22-A101	60℃/ 90%RH IF=20mA	1000Hrs.	10Pcs.	0/1

Criteria For Judging Damage 失效判定标准

Test Items 项目	Symbol 符号	Test Condition 测试条件	Criteria For Judgement 判定标准	Applicable project 适用项目
Forward Voltage 正向电压	Vf	IF=20mA	≤±10%	Reflow Temperature Cycle High and Low Temperature Storage Life Test
Luminous intensity 光强	IV	IF=20mA	Maintenance≥70% 光强维持率	
Lamp bead light test 灯珠点亮测试	/	IF=20mA	No open circuit, shortcircuit or flicke 无开路,短路，闪变	High Temperature High Humidity Life Test

Note: 备注

1.The Reliability tests are based on Refond existing test platform.
可靠性测试基于瑞丰现有的测试标准。
2.The technical information shown in the data sheets are limited to the typical characteristics and circuit examples of the referenced products. It does not constitute the warranting of industrial property nor the granting of any license.
以上技术数据仅为产品的典型值，只作为参考（以最终双方承认的规格为准），不作为任何应用条件及应用方式的保证。

承 认 专 用 章

Confidential

SMT Reflow Soldering Instructions　SMT回流焊说明

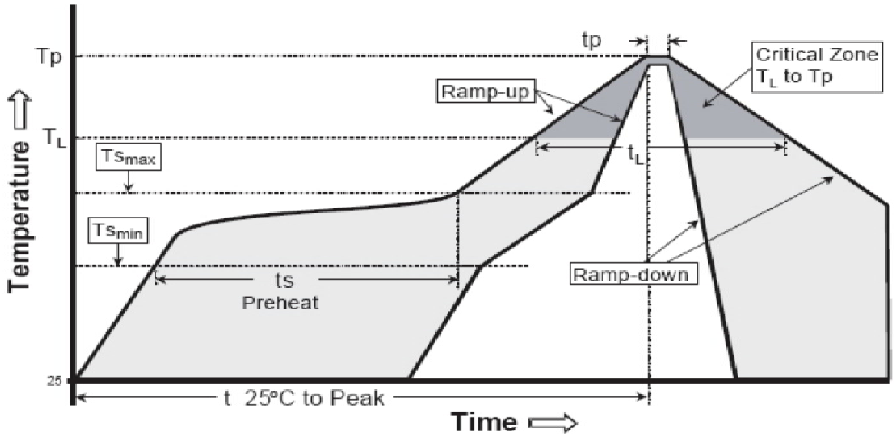

平均升温速度（Tsmax至Tp）	最高 3 ° C/ 秒
预热：最低温度 (Tsmin)	150 ° C
预热：最高温度 (Tsmax)	200 ° C
预热：时间（tsmin至tsmax）	60 - 120 秒
限时维持高温：温度 (TL)	217 ° C
限时维持高温：时间 (tL)	最多60 秒
峰值 / 分类温度 (Tp)	260 ° C
限时峰值分类温度:时间（tp）	最多10 秒
与实际峰值温度 (tp) 低 5 ° C 以内的保持时间	最多30 秒
降温速度	最高 6 ° C/ 秒
25 ° C 升至峰值温度所需时间	最多 8 分钟

1.Reflow soldering should not be done more than two times. In the case of more than 24 hours passed soldering after first, LEDs will be damaged. 回流焊次数不可以超两次，两次回流焊时间间隔如果超过24小时，LED可能由于吸湿而损坏

2.When soldering , do not put stress on the LEDs during heating当焊接时，不要在材料受热时用力压胶体表面。

■ Soldering Iron　烙铁焊接

1.When hand soldering, keep the temperature of iron below less 300℃ less than 3 seconds
当手工焊接时，烙铁的温度必须小于300℃，时间不可超过3秒。

2.The hand solder should be done only one time.手工焊接只可焊接一次。

■ Repairing 修补

Repair should not be done after the LEDs have been soldered. When repairing is unavoidable,a double-head soldering iron should be used (as below figure). It should be confirmed in advance whether the characteristics of LEDs will or will not be damaged by repairing. LED回流焊后不应该修复，当必须修复时，必须使用双头烙铁，而且事先应确认此种方式会不会损坏LED本身的特性。

■ Cautions 注意事项

1.The encapsulated material of the LEDs is silicone. Therefore the LEDs have a soft surface on the top of package. The pressure to the top surface will be influence to the reliability of the LEDs. Precautions should be taken to avoid the strong pressure on the encapsulated part. So when usethe picking up nozzle, the pressure on the silicone resin should be proper. LED封装胶为硅胶，表面较软，用力按压胶体表面会影响LED可靠性，因此应有预防措施避免在按压器件，当使用吸嘴时，胶体表面的压力应是恰当的。

2. Components should not be mounted on warped (non coplanar) portion of PCB. After soldering, do not warp the circuit board.LED灯珠不要焊接在弯曲的PCB板上，焊接之后，也不要弯折线路板。

3. Do not apply mechanical force or excess vibration during the cooling process to normal temperature after soldering. Do not rapidly cool device after soldering. 回流焊之后冷却过程中，不要对材料实加外力，也不要有震动，回流焊后，不要采用激剧冷却的方式。

承 认 专 用 章

Confidential

Handling Precautions 使用注意事项

1>.LED operating environment and sulfur element composition cannot be over 100PPM in the LED mating usage material. This is provided for informational purposes only and is not a warranty or endorsement.LED工作环境及与LED适配的材料中，硫元素及化合物成份不可超过100PPM，单一的溴元素含量要求小于900PPM，单一氯元素含量要求小于900PPM，溴元素与氯元素总含量必须小于1500PPM（检测含量为与LED直接接触面上元素含量）。

2>.VOCs (Volatile organic compounds) emitted from materials used in the construction of fixtures can penetrate silicone encapsulants of LEDs and discolor when exposed to heat and photonic energy. The result can be a significant loss of light output from the fixture. Knowledge of the properties of the materials selected to be used in the construction of fixtures can help prevent these issues. Refond advises against the use of any chemicals or materials that have been found or are suspected to have an adverse affect on device performance or reliability. To verify compatibility, Refond recommends that all chemicals and materials be tested in the specific application and environment for which they are intended to be used. Attaching LEDs, do not use adhesives that outgas organic vapor. 应用套件中的挥发性物质会渗透到LED内部，可能对LED性能或者可靠性不利，在通电情况下会加剧影响。因此客户需提前验证，避免套件材料或其他组装原物料存在未经验证的挥发性物质，针对特定的用途和使用环境，瑞丰建议对所有的物质和材料进行相容性的测试。

3>.Handle the component along the side surface by using forceps or appropriate tools; do not directly touch or Handle the silicone lens surface, it may damage the internal circuitry.
通过使用适当的工具从材料侧面夹取，不可直接用手或尖锐金属压胶体表面，它可能会损坏内部电路。

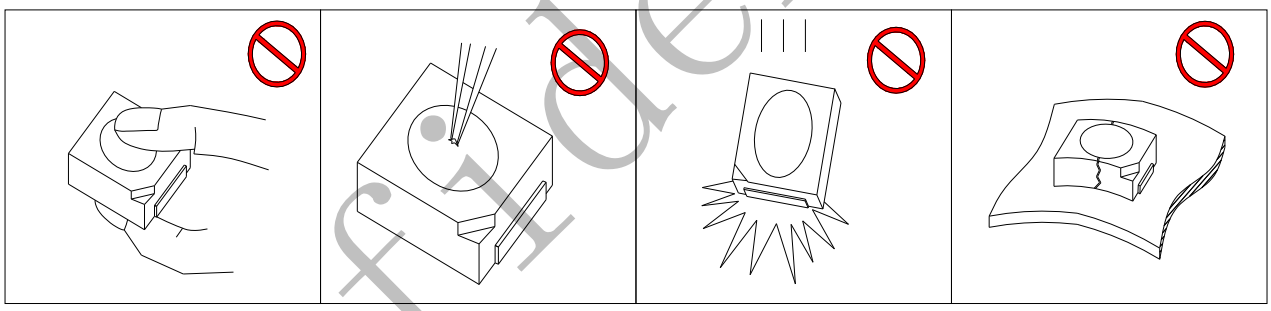

4>. In designing a circuit,the current through each LED must be exceed the absolute maximum rating specified for each LED.In the meanwhile,resistors for protection should be applied,otherwise slight voltage shift will cause big current change,burn out may happen. The driving circuit must be designed to allow forward voltage only when it is ON or OFF.If the reverse voltage is applied to LED, migration can be generated resulting in LED damage.设计电路时，通过LED的电流不能超过规定的最大值，同时，还需使用保护电阻，否则，微小的电压变化将会引起较大电流变化，可能导致产品损毁。电路设计必须保证只有在开启或者关闭的时候出现正向电压的变化，不要施加反压，否则会损坏LED。

5>.Thermal Design is paramount importance because heat generation may result in the Characteristics decline,such as brightness decreased,Color change and so on.Please consider the heat generation of the LEDs when making the system design.LED容易因为自身的发热和环境的温度改变而改变，温度升高会降低LED发光效率，影响发光颜色，所以在设计时应充分考虑散热问题。

深圳瑞丰光电子股份有限公司 承认专用章

Confidential

6> .Compared to standard encapsulants, silicone is generally softer, and the surface is more likely to attract dust，requiring special care during processing. In cases where a minimal level of dirt and dust particles cannot be guaranteed, a suitable cleaning solution must be applied to the surface after the soldering of components. Refond suggests using isopropyl alcohol for cleaning. In case other solvents are used, it must be assured that these solvents do not dissolve the package or resin. Ultrasonic cleaning is not recommended. Ultrasonic cleaning may cause damage to the LED. 与其他封装胶相比，硅胶通常较软，表面易吸附脏物，应用时应特别注意，当对产品洁净度要求较高时，应当采用恰当的清洗方式，我们推荐用异丙醇作清洗剂，如需要用到其他清洗剂，必须保证不会破坏封装体，超声清洗可能会对LED带来损害，不推荐这种清洗方式。

7> . Storage　储存

Conditions 种类		Temperature 温度	Humidity 湿度	Time 时间
Storage 储存	Before Opening Aluminum Bag 拆包前	≤30℃	≤75%	Within 1 Year from Delivery Date 一年内
	After Opening Aluminum Bag 拆包后	≤30℃	≤60%	24hours 24小时
Baking 烘烤		60±5℃	-	≥24hours 大于24小时

If the moisture absorbent material (silica gel) has faded away or the LEDs have exceeded the storage time, baking treatment should be performed after unpacking and based on the following condition: (65±5)℃ for above 24 hours。

如果干燥剂或包装失效，或者产品不符合以上有效储存条件，需拆包后进行烘烤，烘烤条件: 60±5℃，大于 24 小时。

If the package is flatulence or damaged, please notify the sales staff to assist。

如果包装袋胀气或者破损，请通知销售人员协助处理。

8> .Similar to most Solid state devices; LEDs are sensitive to Electro-Static Discharge (ESD) and Electrical Over Stress (EOS). LED为半导体器件，对静电敏感，生产和使用时需要做好防护。

9>.There should be Revalidated when there is any change on the use condition(like fixture type, raw material, Radiating change) after the approval.产品承认后，如需变更使用环境条件（如：转换产品种类和结构），必须重新验证。

10>.When you have special quality requirement for the product, please kindly contact to our sales.对产品有特殊质量要求时，请提前咨询瑞丰的销售人员以取得相关信息。

11>.When using LED, clients shall pay attention to the defined specs and using environment requires.Refond will give no quality guarantee on the situation: if using in conditions that out of specs or over reference conditions which without verifying,客户在应用LED时，需参考此规格书参数及使用环境要求，未经验证情况下超出参数或标准条件使用，瑞丰不作任何品质担保。

深圳瑞丰光电子股份有限公司 承认专用章

Confidential

12>.The customer shall not disassemble or analyze the LEDs without having consent from Refond. When defective LEDs are found, the customer shall inform Refond in writing directly before disassembling or analysis.
在取得瑞丰的同意前，客户不应对产品进行拆解分析，如发现失效产品，请直接书面通知瑞丰。

13>.Other points for attention, please refer to our LED user manual.
其它注意事项请参照瑞丰 LED 使用手册。

Declare申明

This specification is written both in English and in Chinese and the latter is formal.
此规格书以中英文方式书写，若有冲突以中文版本为准.

Both the customers and Refond will agree on official specifications of supplied products before a customer's volume production. The specification is valid only after be signed. And Refond reserves the right to further modify the specification for technical reference and sample without noticing the customers.
在量产供货前，瑞丰需与客户签署一份正式的产品规格书并各自备份。规格书签核后方有效，对于作为技术参考以及送样时提供的规格书，瑞丰保留进一步修改而不需通知客户的权力。

Confidential

深圳市瑞丰光电子股份有限公司
承 认 专 用 章