Part No./型号: SEL-2835-xHI-3V150

产品承认书
SPECIFICATION FOR APPOVAL

客户名称 Customer	
送样规格 Specification	SEL-2835-xHI-3V150
送样日期 Deliver Date	
基本参数 Basic parameters	参见规格书
特殊要求 Special Requirements	五阶

拟制 Issued	审核 Checked	批准 Approved	客户承认盖章 Customer Approved Signatures

客户使用条件及意见 Customer customer conditions and comments：

您的宝贵意见是我们进步的源泉！ Your advices are our source of progress！

Part No./型号: SEL-2835-xHI-3V150

1、Features/特 征：

- Emitting Color/发光颜色：White/白色
- Lens Type/封装特性：Yellow Diffused/黄色散射
- Device Outline/外形特征：3.5×2.8×0.7（unit:mm）
- HBM ESD:2000V/人体抗静电指标：2000V
- Pb-Free/无铅
- RoHS compliant/符合RoHS 标准

2、Applications/应 用：

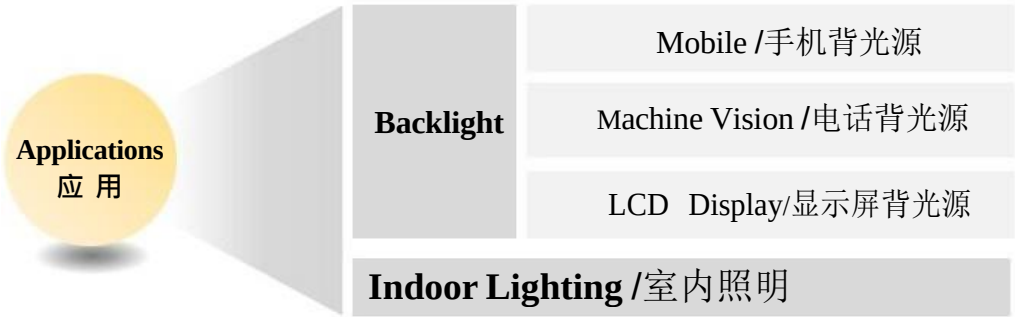

3、Outline Dimensions/产品外形尺寸：

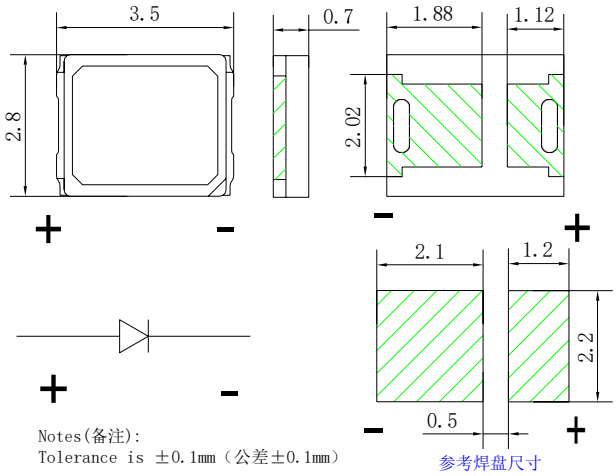

4、Absolute maximum ratings/极限参数（Ta＝25℃）:

Parameter 参数	Symbol 符号	Value 参数	Unit 单位
Power Dissipation 损耗功率	Pd	500	mW
Reverse Voltage 反向电压	VR	7	V
Pulse Current 正向峰值电流[1]	IFp	300	mA
Forward Current 正向工作电流	IFm	150	mA
Operating Temperature 工作温度范围	Topr	- 40 ~ +85	℃
Storage Temperature 储存温度范围	Tstr	- 40 ~ +100	℃
Junction Temperature 结温	Tj	125	℃

Notes/备注：[1]. 0.1ms pulse width,1/10 Duty. /[1] 脉冲宽度0.1ms，占空比1/10。

5、Electrical and optical characteristics/光电参数（Ta＝25℃）:

Parameter 参数	Symbol 符号	Test Condition 测试条件	Value 参数[1]			Unit 单位
			Min.	Typ.	Max.	
Forward Voltage 正向电压	V_F	I_F = 150mA	3.0	3.2	3.4	V
Reverse Current 反向电流	I_R	V_R = 7V	——	——	50	μA
Color Correlated Temperature 色温	CCT	I_F = 150mA	2580	——	7050	K
Luminous Flux 光通量	Φ	I_F = 150mA	39	——	55	Lm
color rendering index 显色指数	Ra	I_F = 150mA	90	——	——	——
Thermal Resistance[2] 热阻	Rthj-s	I_F =150mA	——	30	——	℃/w
Viewing Angle 发光指向角	2θ1/2	I_F = 150mA	——	120	——	Deg.

Notes/备注:[1] Tolerance 误差：VF：±0.10V， Φ：±15%，其它：±5%; [2]Thermal Resistance is not measured value, the data is only for reference./ [2]热阻非实测值，数据仅供参考。

6、Product Ranks/产品分档范围:

供货型号	电流	光通量(lm)	
SEL-2835-27HI-3V150	IF=150mA	39-43	43-48
SEL-2835-3HI-3V150	IF=150mA	39-43	43-48
SEL-2835-35HI-3V150	IF=150mA	39-43	43-48
SEL-2835-4HI-3V150	IF=150mA	43-48	48-53
SEL-2835-5HI-3V150	IF=150mA	43-48	48-53
SEL-2835-65HI-3V150	IF=150mA	43-48	48-53

电压分档标准	
正向电压V_F值(V) IF=150mA	代表符号
3.0-3.1	Q
3.1-3.2	R
3.2-3.3	S
3.3-3.4	T

Notes/备注：Rank error/分档误差： VF：±0.10V，Φ：±15%

Part No./型号: SEL-2835-xHI-3V150

色坐标分档：

色坐标误差：±0.005

代码	轴	参数				代码	轴	参数			
F6500	X	0.3147	0.3220	0.3111	0.3044	N5700	X	0.3305	0.3378	0.3269	0.3202
	Y	0.3475	0.3437	0.3264	0.3305		Y	0.3522	0.3485	0.3312	0.3353
F5000	X	0.3481	0.3566	0.3438	0.3357	F4000	X	0.3839	0.3924	0.3772	0.3678
	Y	0.3720	0.3675	0.3459	0.3507		Y	0.3946	0.3884	0.3656	0.3722
F3500	X	0.4132	0.4223	0.4046	0.3961	F3000	X	0.4422	0.4521	0.4379	0.4282
	Y	0.4087	0.4018	0.3790	0.3868		Y	0.4162	0.4096	0.3902	0.3963

Diagram

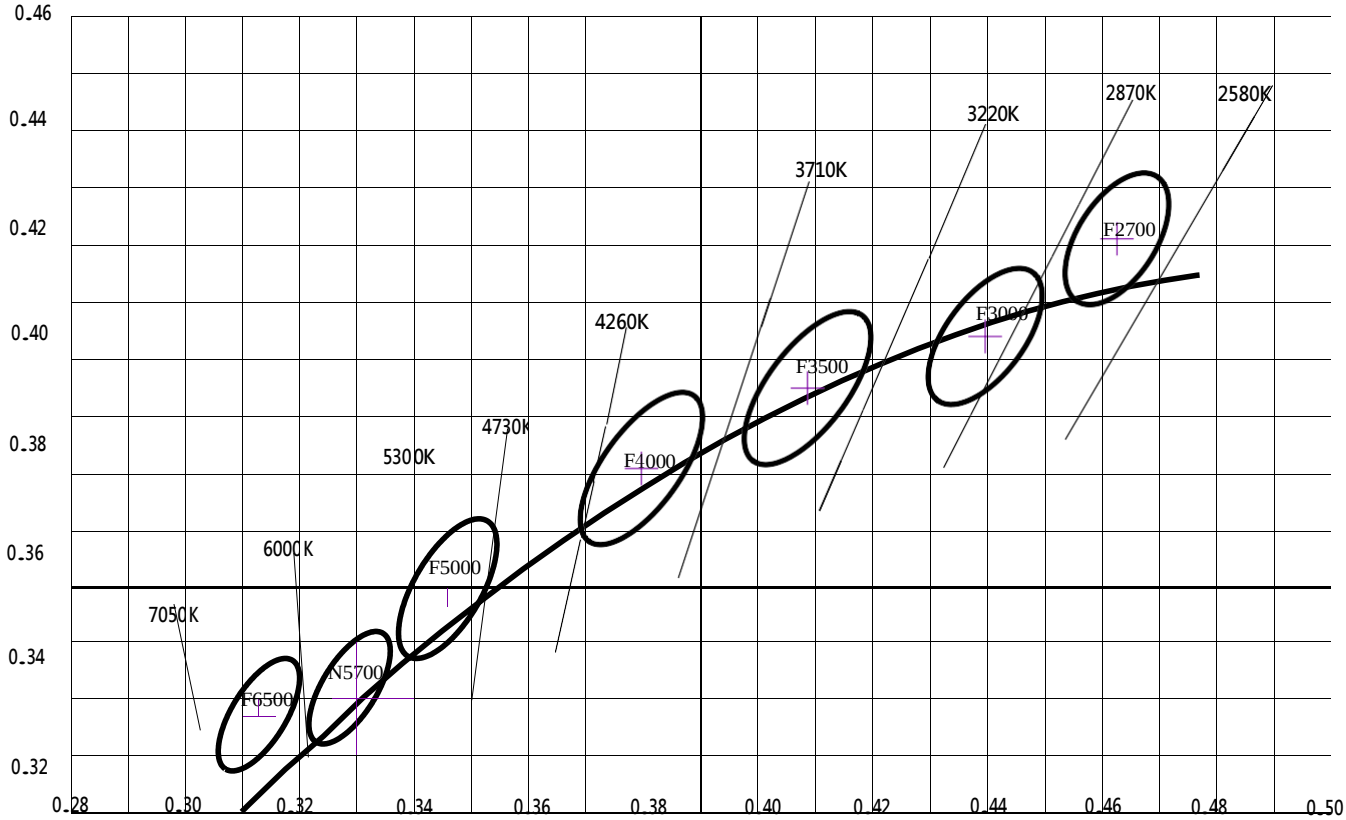

7、Typical electrical/optical characteristic curves/光电特性曲线：

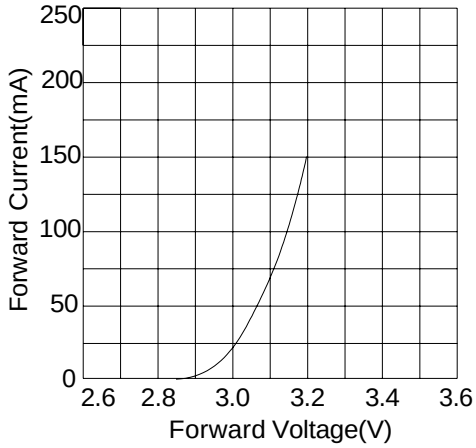

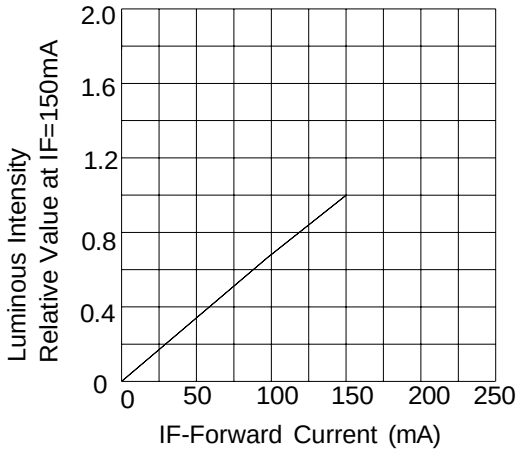

Fig.3 正向电流 Vs. 环境温度

Fig.4 相对亮度 Vs. 环境温度

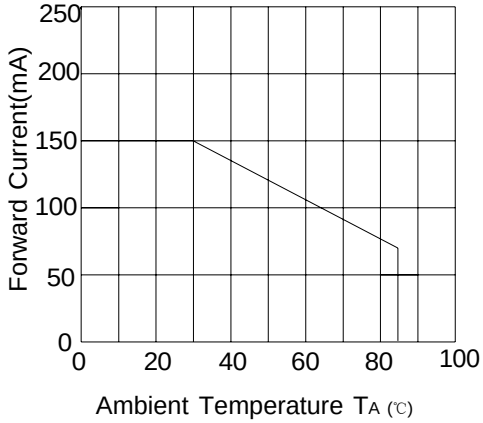

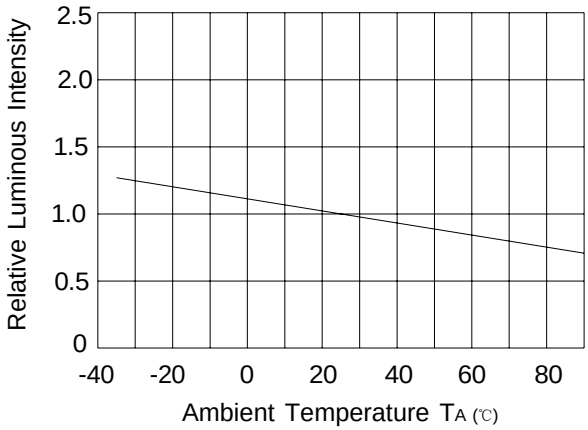

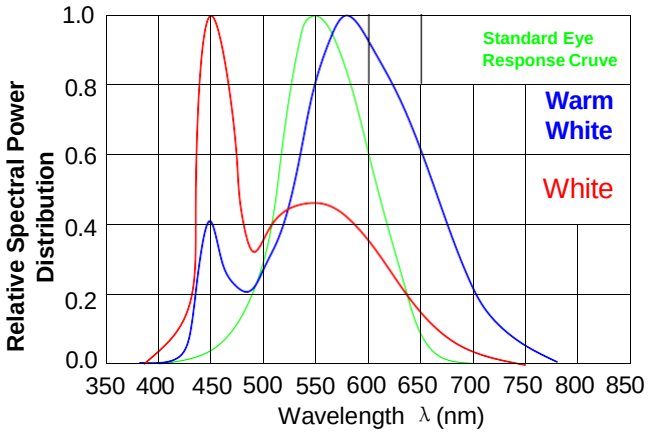

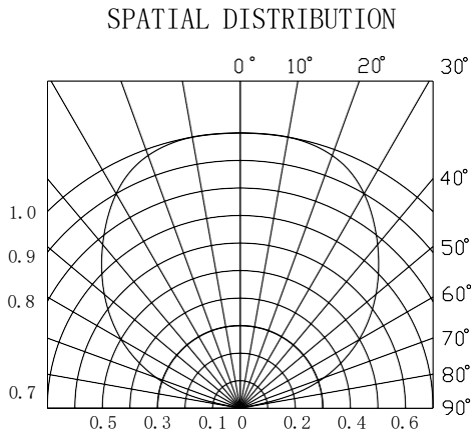

8、Relibility Analysis/可靠性试验

8.1 Test Items And Results/测试项目和判据

No.	Item/项目	Test Condition/测试条件	Spec. / 引用标准	Q'ty/数量	Time/ 时间	Standard/判定
1	IR Reflow (Reflow Soldering) 回流焊接	Tsld=260℃ T=10sec	JESD22-B106	20	3times	ALL PASS
2	Solder ability 可焊性	Tsld=235±5℃，3sec	JESD22-B102	20	1times Over 95%	ALL PASS
3	Temperature Cycle 高低温循环	100℃ 30mins ↑↓5mins -40℃ 30mins	JESD22-A104	20	100cycles	ALL PASS
4	High Temperature High Humidity 高温高湿	85℃/85%RH	JESD22-A118	20	168hrs	ALL PASS
5	High Temperature Storage 高温储存	Ta=100℃(-0/+10℃)	JESD22-A103	20	1000hrs	ALL PASS
6	Low Temperature Storage 低温储存	Ta=-40℃(-10℃/+0)	JESD22-A119	20	1000hrs	ALL PASS
7	Steady State perating Life 电耐久性	Ta=25℃±5℃ IF=150mA	JESD22-A108	20	1000hrs	ALL PASS

8.2 Criteria For Judging Damage/判断标准

Item/项目	Symbol/ 符号	Test conditions /测试条件	Criteria for Judgement /判断标准	
			Min./最小值	Max./最大值
Luminous Intensity/亮度	Iv	IF=150mA	L.S.L *0.7	/
Forward Voltage/正向电压	VF	IF=150mA	/	U.S.L*1.1
Reverse current/反向电流	IR	VR=7v	/	U.S.L*2

*U.S.L.: Upper Standard Level / 上限
*L.S.L.: Lower Standard Level / 下限

9、Specification of Packing /包装规格

9.1 Taping and Orientation/编带和方向

Quantity/数量：4000 units/reel

Diameter/直径：178 mm

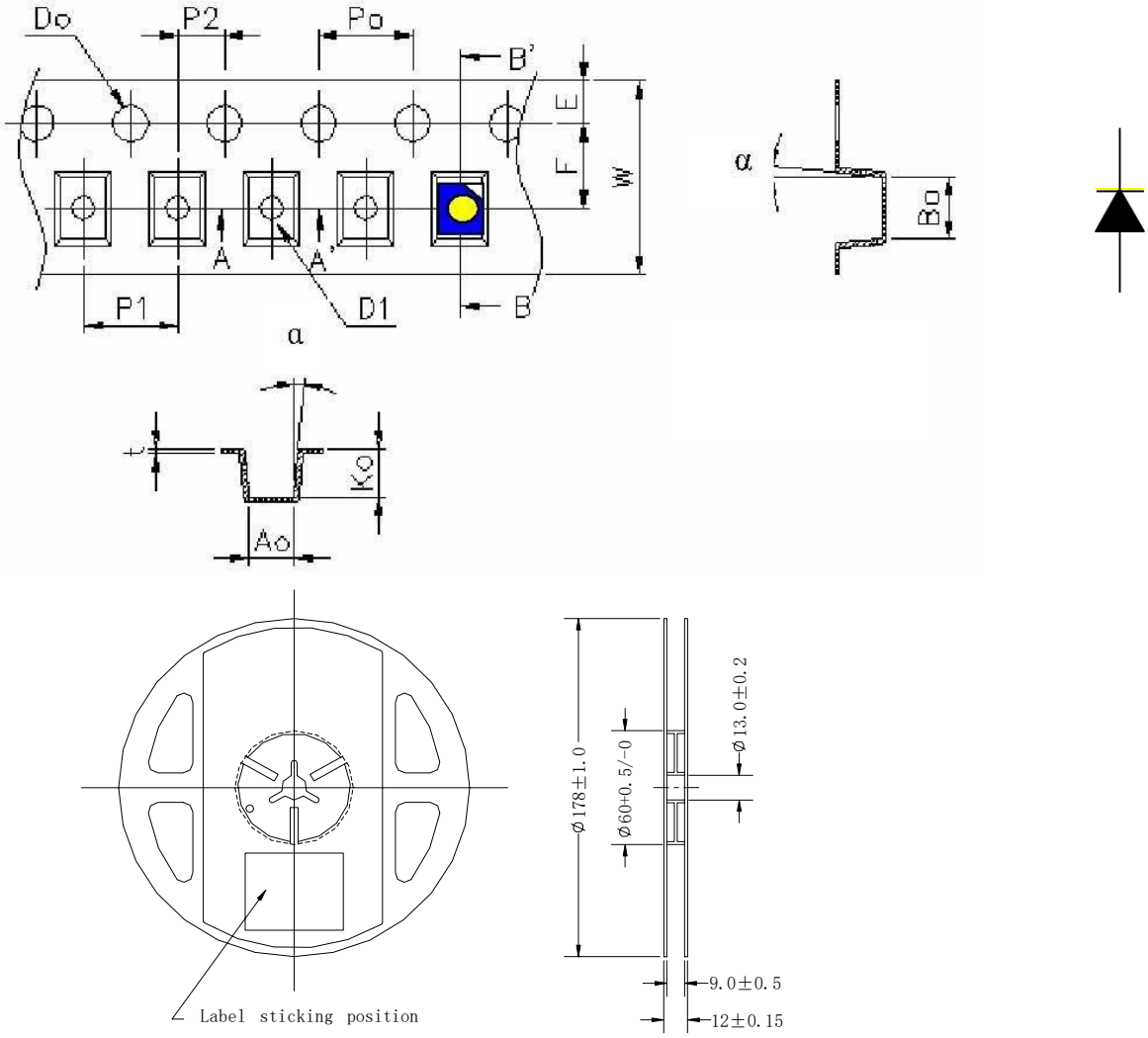

Item/项目	Spec/数值	Tol.(+/-)/误差	Item/项目	Spec/数值	Tol.(+/-)/误差
W	8.00	±0.10	P2	2.00	±0.05
E	1.75	±0.10	T	0.20	±0.02
F	3.50	±0.010	A0	3.00	±0.10
D0	1.55	±0.05	B0	3.75	±0.10
D1	1.10	±0.1	K0	1.25	±0.10
P0	4.00	±0.1	α	Max 5°	

9.2 Specification of Packing/包装规格

Diameter/直径 ： 178 mm
Width/宽度 ： 12 mm
=>4000 pcs / Reel

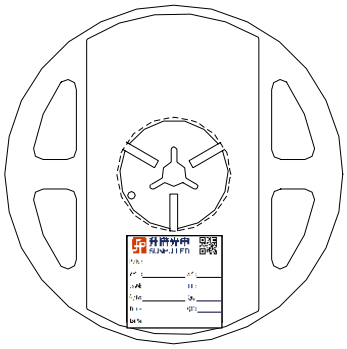

(Anti-Static Shielding/抗静电保护袋)
Thickness/厚度： T=0.1 mm
=> 1 Reel / Bag

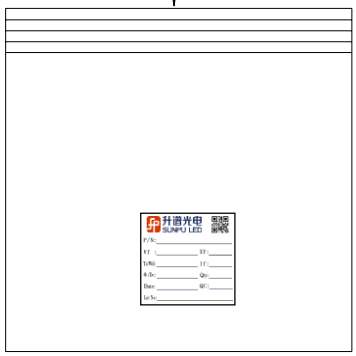

5 Bags / Box

=> 20 ,000 pcs / Box

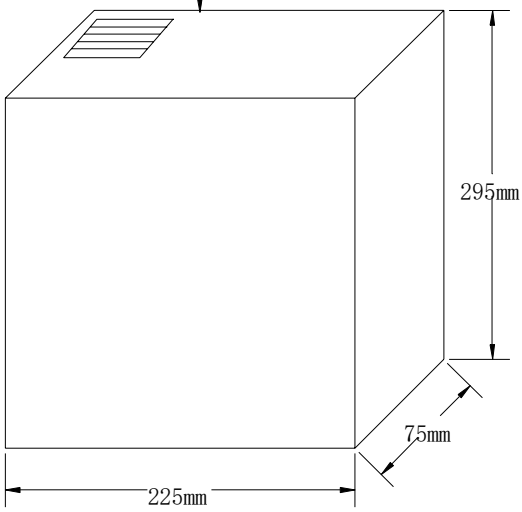

9.3 Label Form Specification/标签格式规范

P/N：Customer's Production Number/产品编号

Ranks：Vf：Vf Rank/电压；Tc/Wd：Color Temperature/色温/ Dominant Wavelength /主波长

Φ/Iv：Φ Rank/光通量/ IV Rank/亮度；XY：Color Group/色系

Qty：Packing Quantity/包装数量

IF： Test Current/测试电流

Date： mm / dd / yy

mm：Month/月；dd：Date/日；yy：Year/年；

Lot No：Production batch Number/生产批号

10、Notes/注意

10.1 Moisture Proof Packaging/防潮包装

10.1.1 LEDs need to package in moisture proof bag. When moisture is absorbed into the SMT package it may vaporize and expand during soldering. There is a possibility that this can cause exfoliation of the contacts and damage to the optical characteristics of the LEDs. For this reason, the moisture proof bag is used to keep moisture to a minimum in the bag.

产品必须包封装在防潮包装袋中。当湿气进入防潮包装袋的时候，在焊接时，湿气会受热汽化膨胀，从而可能影响产品的光学特性，甚至造成封装胶体的开裂剥离。因此，防潮袋要求放置在保持低湿度的盒中。

10.1.2 Moisture proof function is inactive. The moisture proof bag is made of an aluminum moisture proof bag. A package of a moisture absorbent material (silica gel) is inserted into the aluminum moisture proof bag. The silica gel turns the smashing from the transparent circular spherical pellet.

防潮的作用是缓慢的。防潮袋使用铝防潮袋，并在铝防潮袋中放入潮气吸收材料（硅胶干燥剂）。当硅胶干燥剂吸收潮气后，硅胶干燥剂从透明圆形球状颗粒变成粉碎物。

10.2 Storage Method/储存方式

10.2.1 Before opening the bag: The LEDs should be used within a year and kept at 30℃ or less and 60%RH or less. The moisture proof bag with absorbent material is needed when storing the LEDs.

拆开包装袋之前：产品可以储存一年，但要求放置在温度低于30℃,湿度低于60%的环境中；当存放产品时，必须放置在带有干燥剂的防潮容器中。

10.2.2 After opening the bag: The LEDs should be soldered within 24 hours after opening the package. If unused LEDs remain, they should be stored in moisture proof bags with moisture absorbent material. It recommended that the user use the LEDs as soon as possible. If the LEDs have exceeded the storage time or the moisture absorbent material has faded away. Baking process should be performed by using more than 24hours baking at 60±5℃ before using LEDs.

拆开包装袋之后：产品应该在拆封后的24小时内焊接完毕；如果没用完，产品应该储存在带有干燥剂的防潮包装袋中；建议客户尽快的使用完产品；如果产品超出了使用期限或者干燥剂失效，那么产品在使用前必须在60±5℃中烘烤至少24小时。

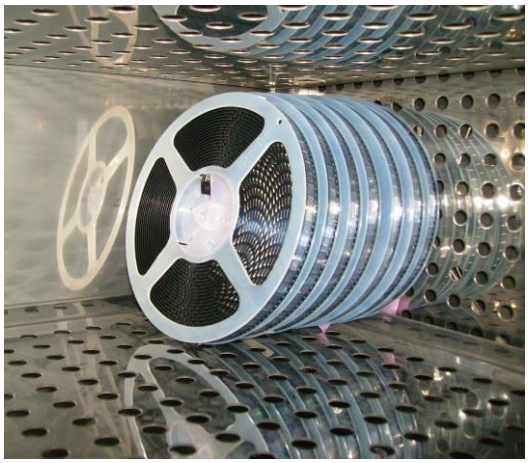

√正确

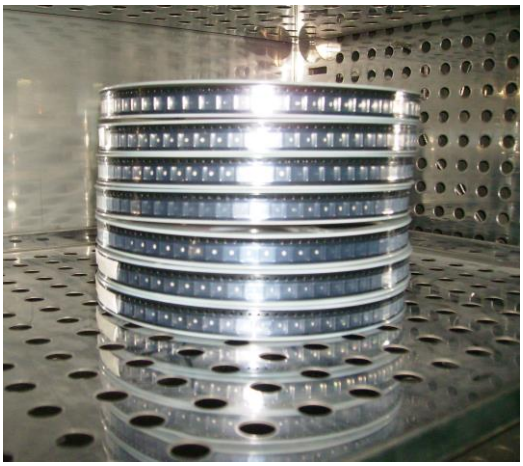

X错误

10.3 Heat Generation/产品热量的产生

Thermal design of the end applications are of paramount importance. Please consider the heat generation of the LED when making the system design. It is necessary to avoid intense heat generation and operate within the maximum ratings given in this specification.

应用产品的热学设计是至关重要的。在做系统设计时，请考虑LED的散热，避免热量的积累，必须严格的在允许的温度范围内使用。

10.4 Soldering/焊接

10.4.1 Lead Solder/回流焊接

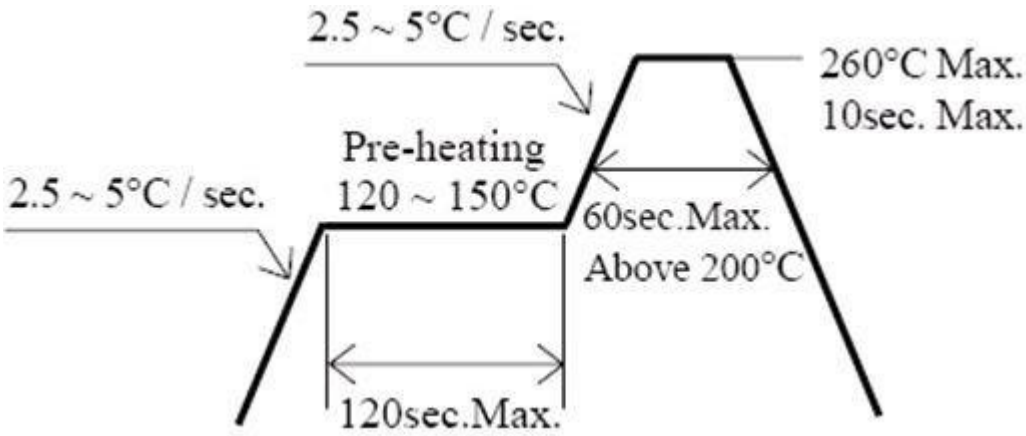

10.4.2 Notes for reflow soldering/回流焊注意事项:

1. Baking process should be performed by using more than 24hours baking at 60±5℃ before using LEDs./ 在使用前LED必须在60±5℃中烘烤至少24小时。

2. Please choose the right nozzle to avoid the damage to products due to the pressure./请选择合适的吸嘴大小和压力，以避免对产品产生不良隐患。

3. No more than twice for reflow soldering./回流焊不可超过两次。

10.4.3 Hand Soldering（Not Recommended）/手工焊接（不推荐）

Soldering iron/烙铁焊接：260 degrees C max/不超过260℃；3 seconds max/不超过3s；once/允许1次.

10.5 Cleaning/清洗

It is recommended that isopropyl alcohol be used as a solvent for cleaning the LEDs. It should be confirmed beforehand whether the solvents will dissolve the package the resin or not when using other solvents. Before cleaning, a pre-test should be done to confirm whether any damage to the LEDs will occur. Please do not clean the LEDs by the ultrasonic.

建议使用酒精作为溶剂清洗LED。若要使用其他溶剂，应该预先证实是否能溶化封装料。在清洗作业前，必须预先实验确认对LEDS无任何的伤害。请不要使用超声波清洗LED。

10.6 Static Electricity/静电

It is recommended that a wrist band or an anti-electrostatic glove be used when handling the LEDs. All devices, equipment and machinery must be properly grounded. It is recommended that precautions be taken against surge voltage to the equipment that mounts the LEDs.

在接触LED时，建议使用防静电手腕带或防静电手套。所有的器件、设备和机器必须有可靠的接地。对所有LED接触的设备，建议采取预防措施消除冲击电压。

10.7 Others/其他

1. The LED light output is strong enough to injure human eyes. Precautions must be taken to prevent looking directly at the LEDs with unaided eyes for more than a few seconds.

LED的光辐射足够强时，会对人眼造成伤害。若眼睛要直接看LED，并且要一定的时间，则必须采取相应防护措施。

2. LED operating environment and sulfur element composition cannot be over 100PPM in the LED mating usage material.

LED工作环境及与LED适配的材料中硫元素及化合物成份不可超过100PPM。

3. Not suitable to operate in acidic environment, PH<7

LED不可用在PH<7的酸性环境。

4. When we need to use external glue for LED application products, please make sure that the external gluematches the LED packaging glue. Additionally ,as most of LED packaging glue is silica gel, and it has strong Oxygen permeability as well as strong moisture permeability; in order to prevent external material from getting into the inside of LED, which may cause the

malfunction of LED, the single content of Bromine element is required to be less than 900PPM,the single content of Chlorine element is required to be less than 900PPM,the total content of Bromine element and Chlorine element in the external glue of the application products is required to be less than 1500PPM.

在使用外封胶涂抹LED产品时，应确保外封胶与LED封装胶水相匹配，因为大多数LED的封装胶水为硅胶，它有较强的氧化性和较强的吸湿性，必须防止外封材质进入LED内部以造成LED的损伤，单一的溴元素含量要求小于900PPM，单一氯元素含量要求小于900PPM，在涂抹LED产品时要求外封胶溴元素与氯元素总含量必须小于1500PPM。

5. To ensure the quality of our LEDs, So please do not put pressure on the LEDs.

为确保LED的可靠性，在操作过程中不可施加压力在LED器件胶体表面。

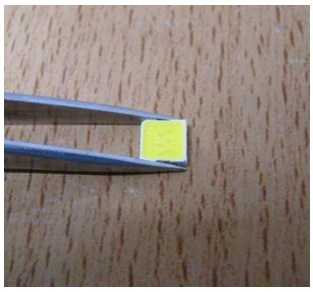

√ 正确

X 错误