Standard Product Reference Sheet

SPW1653JCTE-11-TR

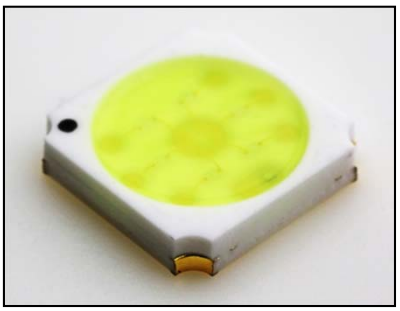

Features

Package	Outer dimension: 5.0 x 5.0 x 1.0mm (L x W x H)
Product features	・6 Dies product, Special color emitting LED (Ice Blue) ・Luminous efficiency : 95lm/W ・Lead-free soldering compatible ・RoHS compliant

Recommended Applications

・Light source for decoration lighting, Amusement equipment etc..

Outline Dimensions

SPW1653JCTE-11-TR

Unit : mm
Weight : 61.4mg
Tolerance : ±0.2

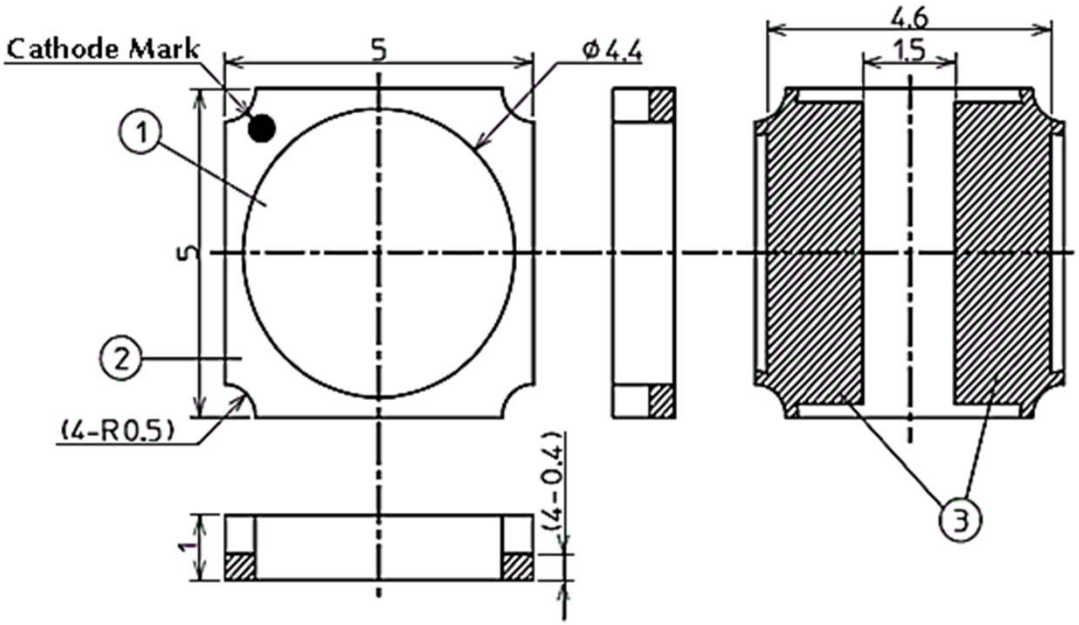

【 Inside circuit 】

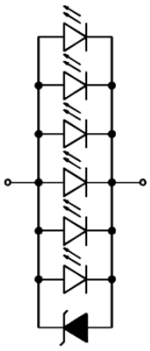

NO.	PART NAME	MATERIALS
-	LED Die	InGaN
-	Protection Diode	Silicon
①	Encapsulant	Silicone Resin
②	Lamp Housing	Ceramics
③	Terminal	Au Plating

Recommended soldering Pattern

Unit : mm

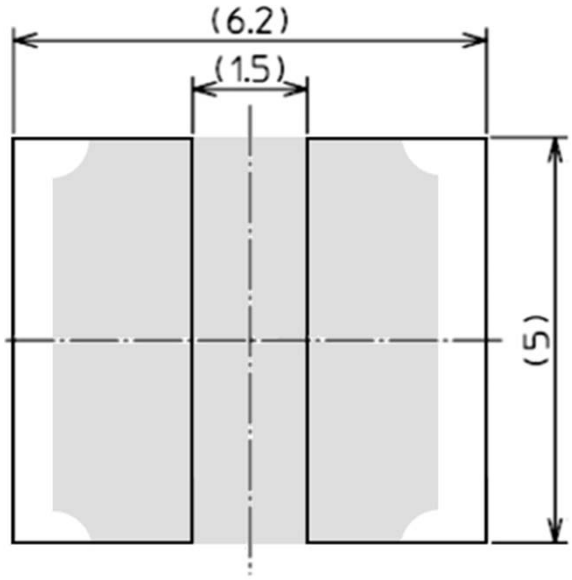

【 Product Overview 】

Die Material	InGaN
Emitting Color	Bluish White
Resin Color【Emitting Area】	Diffused Yellow Green
Lamp housing Color	White

【 Absolute Maximum Ratings 】

(Ta=25℃)

ITEM	SYMBOL	MAXIMUM RATINGS	UNITS	
Power Dissipation	P_d	1,750	mW	
Forward Current	I_F	500	mA	
Repetitive Peak Forward Current【1ms, 1/20duty】	I_{FRM}	500	mA	
Allowable Reverse Current	I_R	85	mA	
Operating Temperature	T_{opr}	−40 ～ +85	℃	Notes1
Storage Temperature	T_{stg}	−40 ～ +100	℃	
Electrostatic Discharge Threshold "HBM"	ESD	1,000	V	Notes2
Junction Temperature	Tj	135	℃	
Soldering Temperature "Reflow Soldering"	T_{sld}	260	℃	Notes3

Notes1 The range of operating and storage temperature is only for LED device, not for taping condition.

Notes2 ESD testing method : EIAJ4701/300(304) Human Body Model(HBM) 1.5kΩ, 100pF

Notes3 Please refer to page 9, Soldering Conditions.

【 Thermal Characteristics 】

(Ta=25℃)

ITEM	SYMBOL	TYP.	MAX.	UNITS	
Thermal Resistance【Junction - Solder Point】	$R_{th(j\text{-}s)}$	20	—	℃/W	Notes4

Notes4 Junction − Solder Point (Measurement Point)

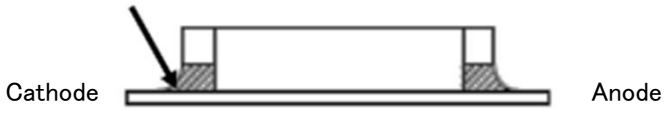

【 Electro-Optical Characteristics 】

[Ta=25℃]

ITEM	SYMBOL	CONDITIONS	MIN.	TYP.	MAX.	UNITS	
Forward Voltage	V_F	I_F = 350mA	2.75	3.00	3.50	V	Notes5
Reverse Voltage	V_R	I_R = 85mA	0.9	—	1.7	V	Notes6
Luminous Flux	Φv	I_F = 350mA	90	113	135	lm	
Efficiency	-	I_F = 350mA	—	95	—	lm/W	
Chromaticity Coordinates	x	I_F = 350mA	—	0.228	—		Notes7,8
	y		—	0.264	—		
Half Intensity Angle	Δθx	I_F = 350mA	—	120	—	deg.	Notes9
	Δθy		—	120	—		

Notes5 Please do not input reverse voltage for prevent the destruction by static electricity.

Notes6,7 Please refer to the following tables, each sorting chart.

Notes8 Chromaticity coordinates : x and y according to CIE1931

Notes9 Viewing angle at 50% Iv, Δθx, Δθy, as shown in the figure right side.

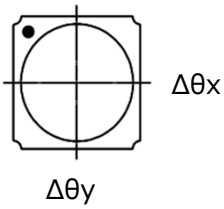

【 Sorting chart For Luminous Flux ,Φv and Forward Voltage VF 】

LEDs shall be sorted out into the following chart and each rank parts shall be packed separately when shipping.

(Ta=25℃, Tj=40℃)

Rank	Luminous Flux Φ_V (lm)		Conditions
	MIN.	MAX.	
SA	90	113	I_F = 350mA
SB	113	135	

Notes Tolerance each rank : ±10%

(Ta=25℃, Tj=40℃)

Rank	Forward Voltage V_F (V)		Conditions
	MIN.	MAX.	
J	2.75	3.50	I_F = 350mA

Notes Tolerance each rank : ±0.1V

【 Sorting chart For Chromaticity coordinates 】

Chromaticity coordinates shall be sorted out into the following chart and each rank parts shall be packed separately when shipping.

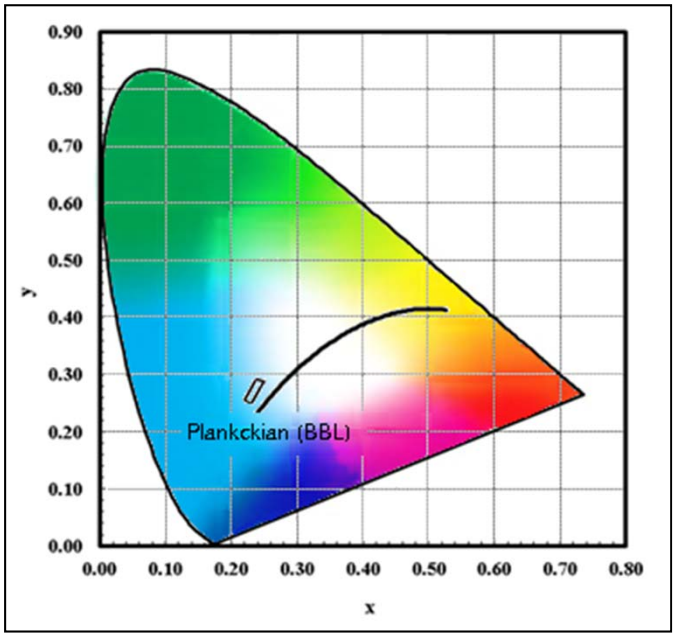

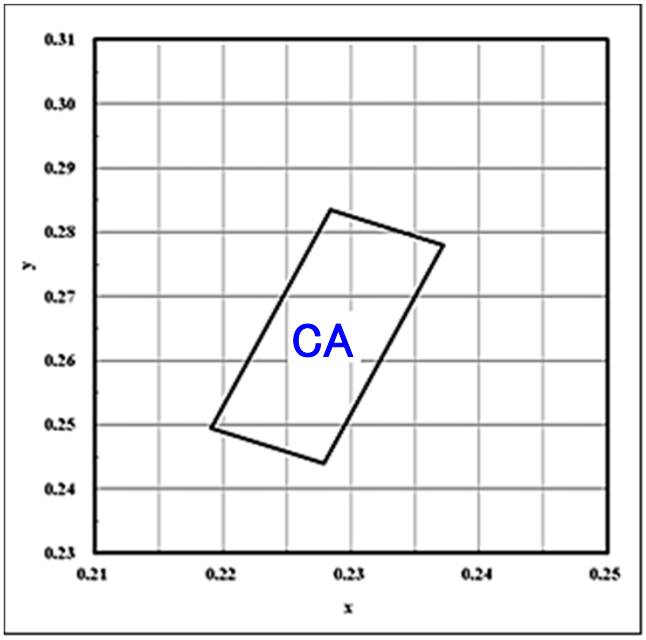

(Ta = 25℃, Tj = 40℃, I_F = 350mA)

Rank		Left Down	Left up	Right up	Right Down
CA	x	0.2284	0.2191	0.2279	0.2372
	y	0.2835	0.2495	0.2440	0.2780

Notes Tolerance : ±0.01

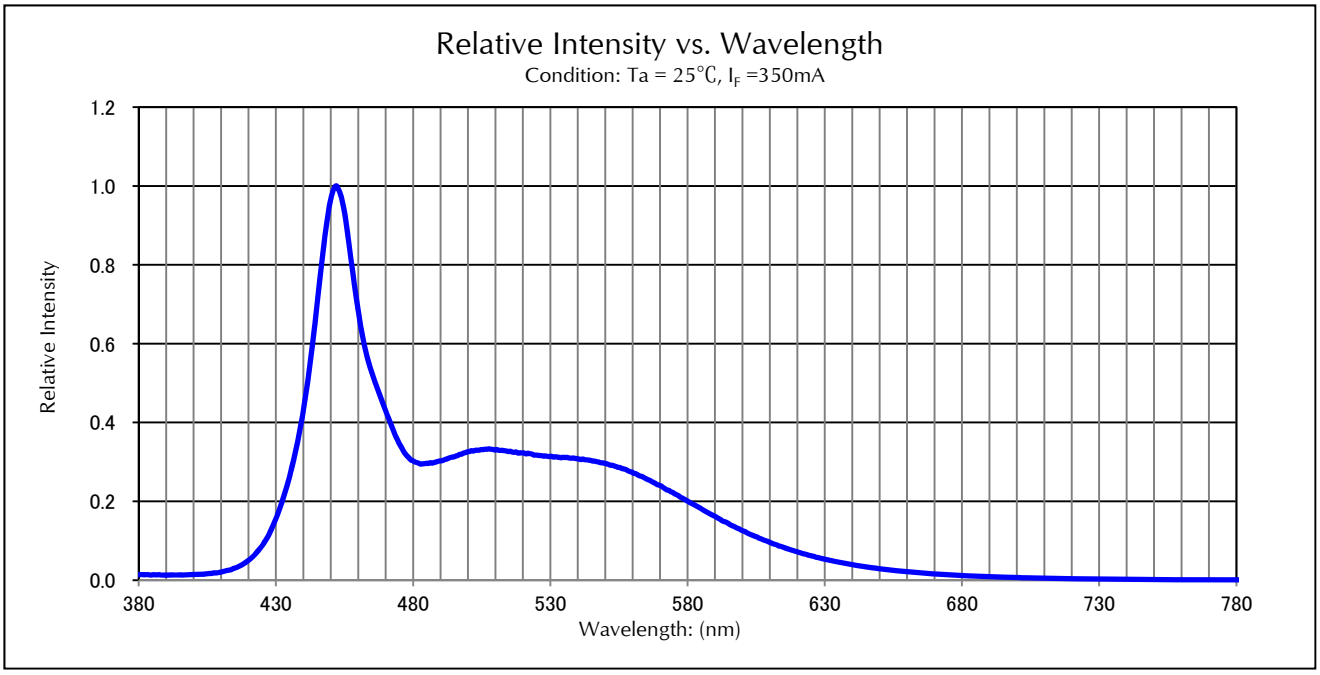
Relative Intensity vs. Wavelength
Condition: Ta = 25℃, I_F =350mA
Relative Intensity
1.2
1.0
0.8
0.6
0.4
0.2
0.0
380
430
480
530
580
630
680
730
780
Wavelength: (nm)

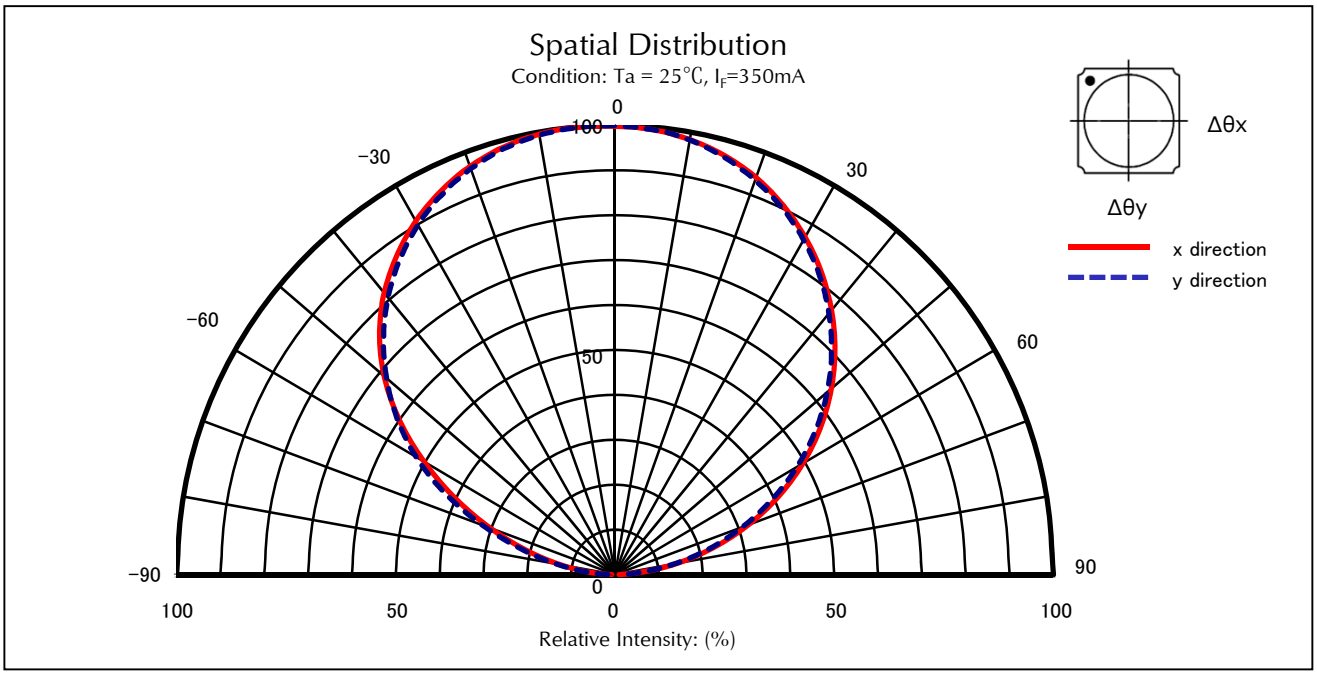
Spatial Distribution
Condition: Ta = 25℃, I_F=350mA
0
100
50
0
-30
30
-60
60
-90
90
100
50
0
50
100
Relative Intensity: (%)
Δθx
Δθy
x direction
y direction

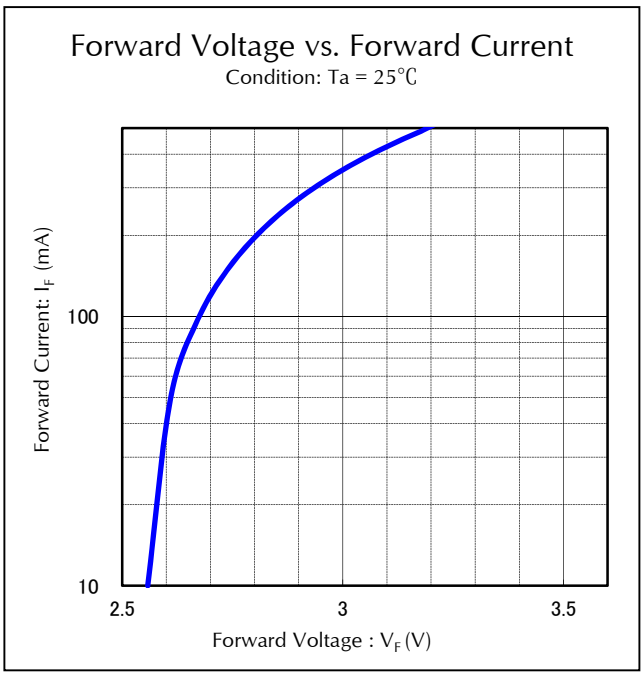
Forward Voltage vs. Forward Current
Condition: Ta = 25℃
Forward Current: I_F (mA)
100
10
2.5
3
3.5
Forward Voltage : V_F (V)

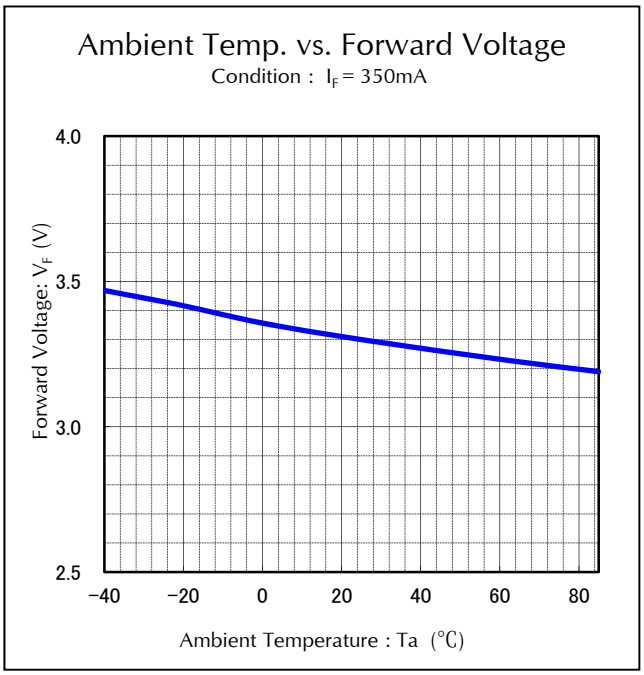
Ambient Temp. vs. Forward Voltage
Condition : I_F = 350mA
Forward Voltage: V_F (V)
4.0
3.5
3.0
2.5
−40
−20
0
20
40
60
80
Ambient Temperature : Ta (℃)

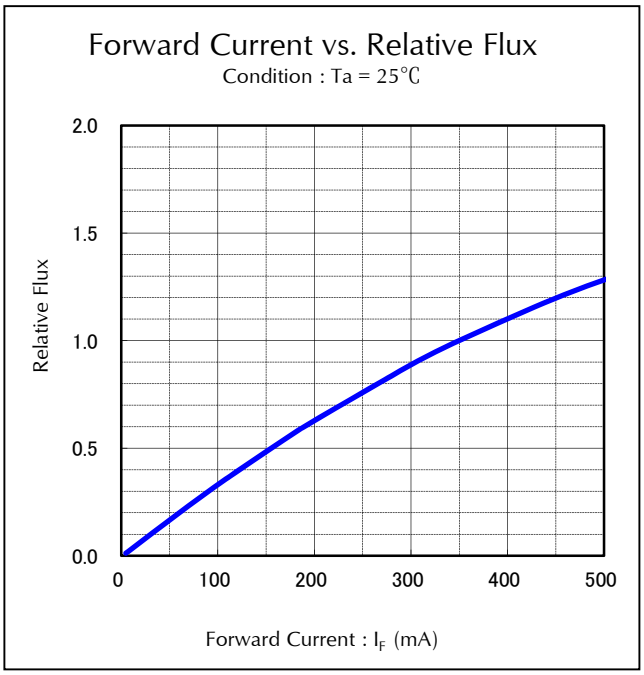
Forward Current vs. Relative Flux
Condition : Ta = 25℃
Relative Flux
2.0
1.5
1.0
0.5
0.0
0
100
200
300
400
500
Forward Current : I_F (mA)

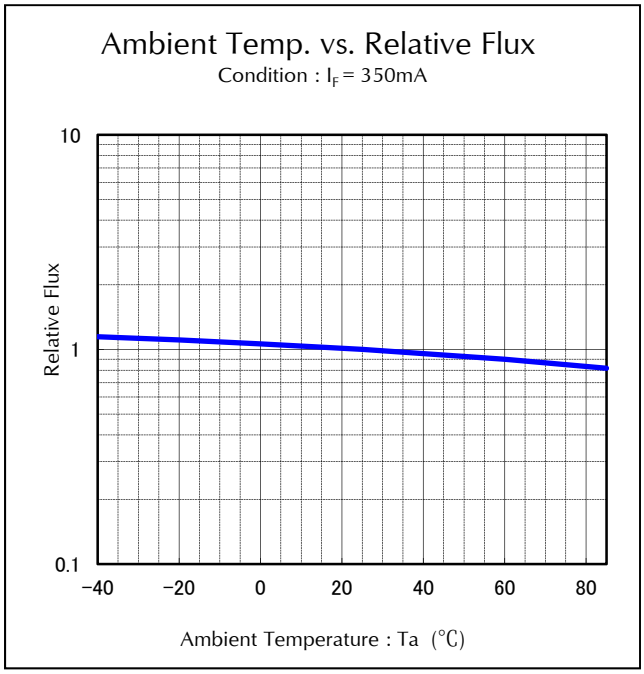
Ambient Temp. vs. Relative Flux
Condition : I_F = 350mA
Relative Flux
10
1
0.1
−40
−20
0
20
40
60
80
Ambient Temperature : Ta (℃)

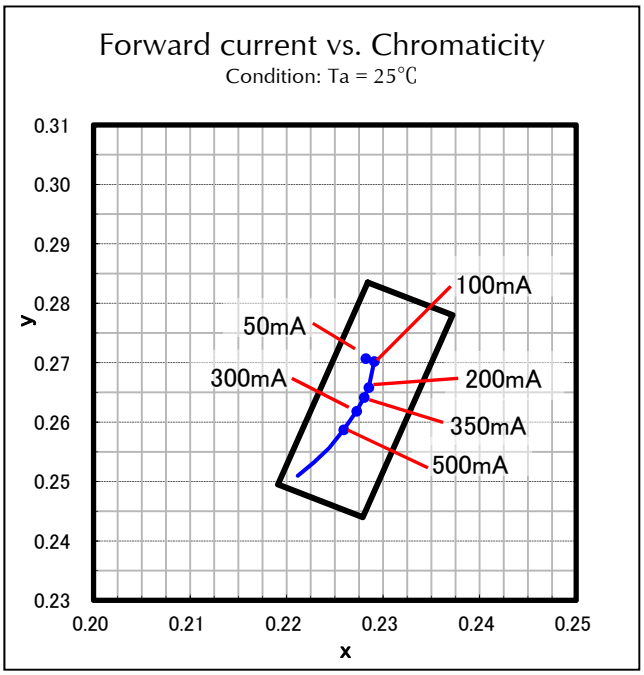
Forward current vs. Chromaticity
Condition: Ta = 25℃
0.31
0.30
0.29
0.28
0.27
0.26
0.25
0.24
0.23
y
0.20
0.21
0.22
0.23
0.24
0.25
x
100mA
50mA
300mA
200mA
350mA
500mA

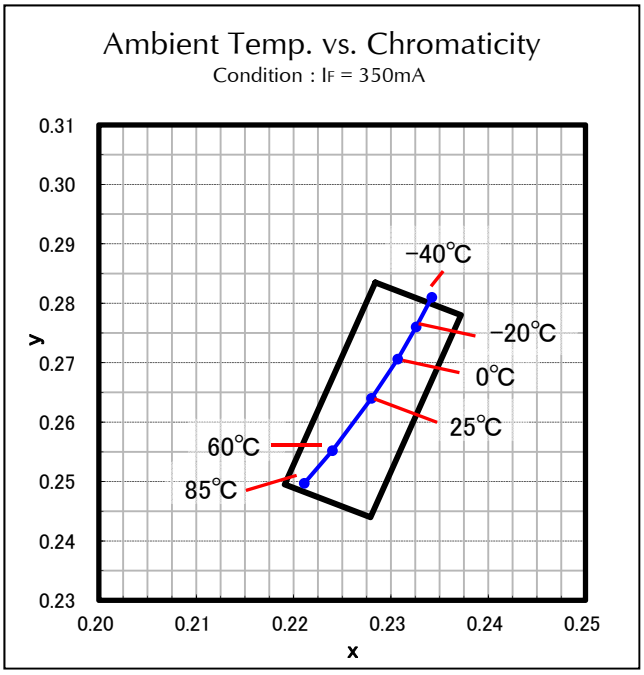
Ambient Temp. vs. Chromaticity
Condition : IF = 350mA
0.31
0.30
0.29
0.28
0.27
0.26
0.25
0.24
0.23
y
0.20
0.21
0.22
0.23
0.24
0.25
x
-40℃
-20℃
0℃
25℃
60℃
85℃

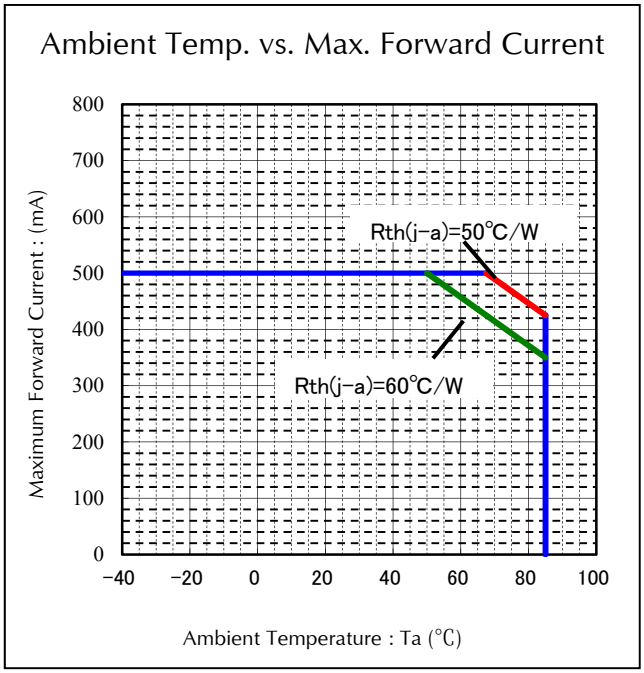
Ambient Temp. vs. Max. Forward Current
Maximum Forward Current : (mA)
800
700
600
500
400
300
200
100
0
-40
-20
0
20
40
60
80
100
Rth(j-a)=50℃/W
Rth(j-a)=60℃/W
Ambient Temperature : Ta (℃)

【Soldering Precaution】

(acc.to EIAJ-4701/300)

1. Heat stress during soldering will influence the reliability of LEDs, however that effect will vary on heating method. Also, if components of varying shape are soldered together, it is recommended to set the soldering pad temperature according to the component most vulnerable to heat (e.g., surface mount LED).

2. LED parts including the resin are not stable immediately after soldering (when they are not at room temperature), any mechanical stress may cause damage to the product. Please avoid such stress after soldering, especially stacking of the boards which may cause the boards to warp and any other types of friction with hard materials.

3. Recommended temperature profile for the Reflow soldering is listed as the temperature of the resin surface. Temperature distribution varies on heating method, PCB material, other components in the assembly, and mounting density .
   Please do not repeat the heating process in Reflow process more than twice.

【Recommended Reflow Soldering Condition 】

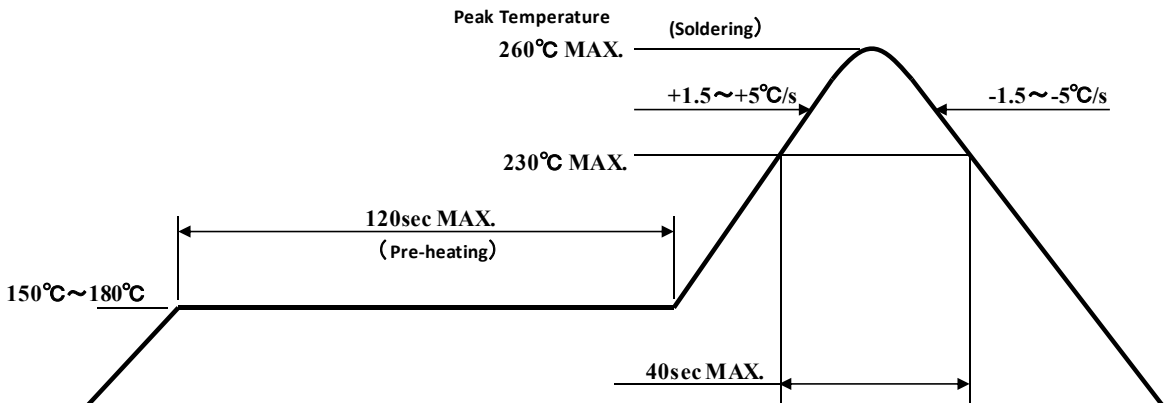

Note 1 Temperature Profile for the reflow should be set to the surface temperature of resin which is on the top of LED. This should be the maximum temperature for soldering. Lowering the heating temperature and decreasing heating time is very effective in achieving higher reliability.

Note 2 The reflow soldering process should be done up to twice(2 times Max).
When second process is performed, interval between first and second process should be as short as possible to prevent absorption of moisture to resin of LED.
The second soldering process should not be done until LEDs have returned to room temperature (by nature-cooling) after first soldering process.

4. If soldering manually, Stanley recommends using a soldering iron equipped with temperature control. During the actual soldering process, make sure that the soldering iron never touches the LED itself, and avoid the LED's electrode heating temperature reaching above the heating temperature of the solder pad. All repairs must be performed only once in the same spot, and please avoid reusing components.

5. In soldering process, immediately after iron tip is cleaned, please make sure that the soldering iron reaches the appropriate temperature, before using. Also, please avoid applying any types of pressure to the soldered components before the solder has been cooled and hardened, as it may deteriorate solder performance and solder quality.

6. When using adhesive material for tentative fixatives, thermosetting resin or Ultraviolet radiation (UV) setting resin with heat shall be recommended.

【Recommended Manual Soldering Condition】

Temperature of Iron Tip	350℃MAX.
Soldering Duration, Time	3sec.Max., Once

7. Flow soldering (dip soldering) is not recommended for this product.

8. Isopropyl alcohol is recommended for cleaning. Some chemicals, including Freon substitute detergent could corrode the lens or the casing surface, which cause discoloration, cloud, crack and so on. Please review the reference chart below for cleaning. If water is used to clean (including the final cleaning process), please use pure water (not tap water), and completely dry the component before using.

《The curing condition, Temperature:150℃Max./Time:120sec.Max.》

Chemical	Adaptability
Ethyl Alcohol	○
Isopropyl Alcohol	○
Pure Water	○
Trichloroethylene	×
Chlorothene	×
Acetone	×
Thinner	×

【For Electric Static Discharge (ESD)】

This kind of LED lamp is highly sensitive to surge voltage generated by the On/Off status change and discharges of static electricity through frictions with synthetic materials, which may cause severe damage to the die or undermine its reliability. Damaged products may experience conditions such as extremely high reverse voltage, or a decrease of forward rise voltage, deteriorating its optical characteristic.
Stanley products are designed to withstand up to 1,000V under the EIAJ ED-4701/300 Test #304 (HBM), and are packed with anti-static components. However, the following precautions and measures are vital in ensuring product quality during shipment.
EIAJ ED-4701/300(304/HBM) Electrification model: C=100pF, R2=1.5KΩ

1. Electrification/Static Electricity protection

Stanley recommends the following precautions in order to avoid product (die) damage from static electricity , when an operator and other materials electrified by friction coming in contact with the product.

① Do not place electrified non-conductive materials near the LED product.
Avoid LED products from coming into contact with metallic materials.(Should the metallic material be electrified , the sudden surge voltage will most likely damage the product.)

② Avoid a working process which may cause the LED product to rub against other materials.

③ Install ground wires for any equipment, where they can be installed, with measures to avoid static electricity surges.

④ Prepare a ESD protective area by placing a Conductive Mattress (1MΩ MAX.) and Ionizer to remove any static electricity.

⑤ Operators should wear a protective wrist-strap.

⑥ Operators should wear conductive work-clothes and shoes.

⑦ To handle the products directly, Stanley recommends the use of ceramic, and not metallic, tweezers.

2. Working Environment

① A dry environment is more likely to cause static electricity. Although a dry environment is ideal for storage state of LED products, Stanley recommends an environment with approximately 50% humidity after the soldering process.

② Recommended static electricity level in the working environment is 150V, which is the same value as Integrated Circuits (which are sensitive to static electricity).

【Other Precautions】

1. Stanley LED Lamps have semiconductor characteristics and are designed to ensure high reliability. However, the performance may vary depending on usage conditions.

2. Absolute Maximum Ratings are set to prevent LED lamps from failing due to excess stress(temperature, current, voltage, etc.). Usage conditions must not exceed the ratings for a moment, nor do reach one item of absolute maximum ratings simultaneously.

3. In order to ensure high reliability from LED Lamps, variable factors that arise in actual usage conditions should be taken it to account for designing. (Derating of TYP., MAX Forward Voltage, etc.)

4. Please insert Straight Protective Resistors into the circuit in order to stabilize LED operation and to prevent the device from igniting due to excess current.

5. Please be careful when LED is soldered on a metal plate, since solder crack might be caused by heat .

6. Please avoid using this product with materials or products that contain sulfur or chlorine element which may damage the product. Keep the product in desiccator regardless of before or after mounting to prevent corrosive gas. Also make sure there is no corrosive gas which occurs in surrounding area or invade from outside when using products.

7. Please avoid the stick of foreign material because molding resin in the products have adhesiveness. And please don't touch encapsulant portion.

8. Please check the actual performance in the assembly because the Specification Sheets are described for LED device only.

9. Please refrain from looking directly at the light source of LED at high output, as it may harm your vision.

10. The products are designed to operate without failure in recommended usage conditions. However, please take the necessary precautions to prevent fire, injury, and other damages should any malfunction or failure arise.

11. The products are manufactured to be used for ordinary electronic equipment. Please contact our sales staff beforehand when exceptional quality and reliability are required, and the failure or malfunction of the products might directly jeopardize life or health (such as for airplanes, aerospace, transport equipment, medical applications, nuclear reactor control systems and so on).

12. The formal specification sheets shall be valid only by exchange of documents signed by both parties.

【Handling Precautions for Product Mounting】

＜Recommendation＞

1. Picking up point with nozzle: Lamp housing of the product (area)
   (Shown below)

   The picking up point should be within lamp housing portion, because the silicone resin used for the encapsulant is soft. (If the nozzle makes contact with the encapsulant, the products might be destroyed)

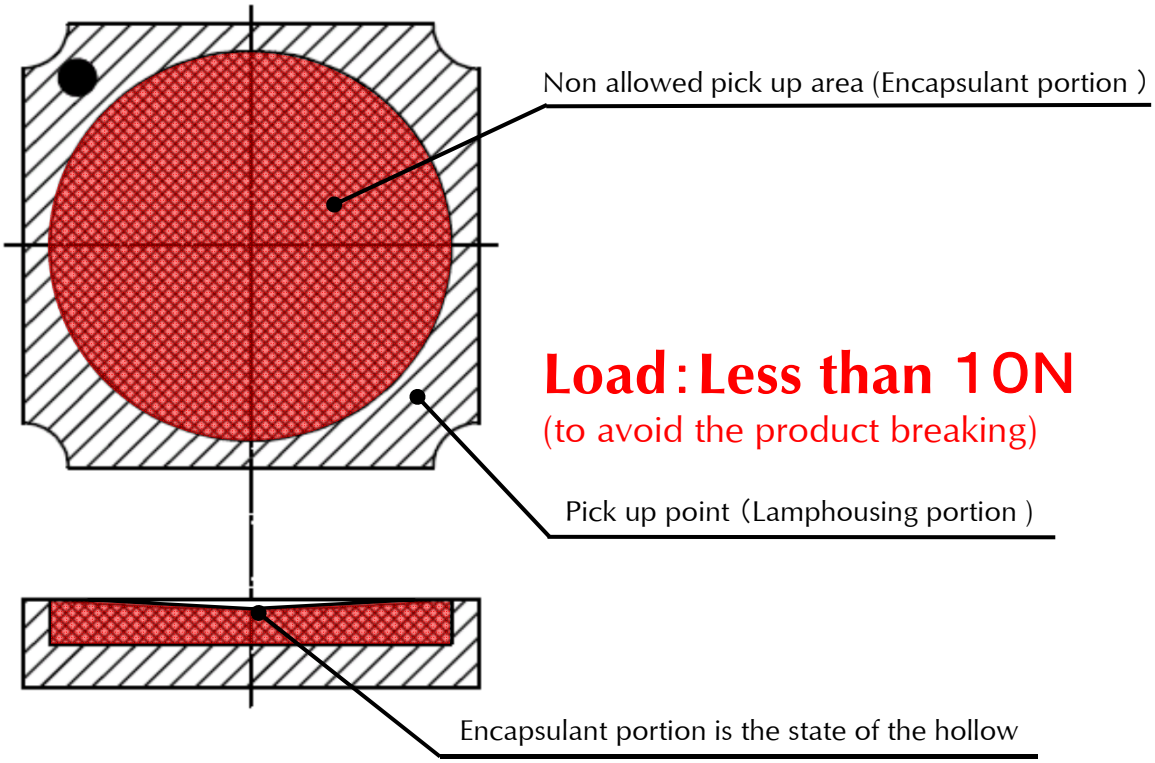

Please adjust the load, the pick up point, the nozzle diameter, etc. before mounting because the over load can cause the breakage of the lamp housing.

This product is baked (moisture removal) before packaging, and is shipped in moisture-proof packaging (as shown below) to minimize moisture absorption during transportation and storage. However, with regard to storing the products, Stanley recommends the use of dry-box under the following conditions is recommended. Moisture-proof bag as the packaging is made of anti-static material but packaging box is not.

【Recommended Storage Condition / Products Warranty Period 】

Temperature	+5～30℃
Humidity	Under 70%

In the case of the package unopened , 6 months under【 Recommended Storage Condition 】.
Please avoid rapid transition from low temp. condition to high temp. condition
and storage in corroding and dusty environment.

【Time elapsed after Package Opening】

The package should not be opened until immediately prior to its use, and please keep the time frame between package opening and soldering which is **【maximum 168h】**.
If the device needs to be soldered twice, both soldering operations must be completed within the 168h.

If any components should remain unused, please reseal the package and store them under the conditions described in the【 Recommended Storage Condition 】above.

This product must be required to perform baking process (moisture removal)
for at least 23h at 60±5 degrees Celsius if following conditions apply.

1. In the case of silica gel (blue) which indicates the moisture level within the package, changes or loses its blue color.
2. In the case of time passes for 168h after the package is opened once.

Baking process should be performed after LED having been taken out of the package.

Baking may be performed in the tape-reel form , however if it is performed with the reel stacked over one another, it may cause deformation of the reels and taping materials and later obstruct mounting. Please handle only once it has returned to room temperature. Provided that, baking process shall be 2 times MAX.

【Moisture-proof Packaging Specification】

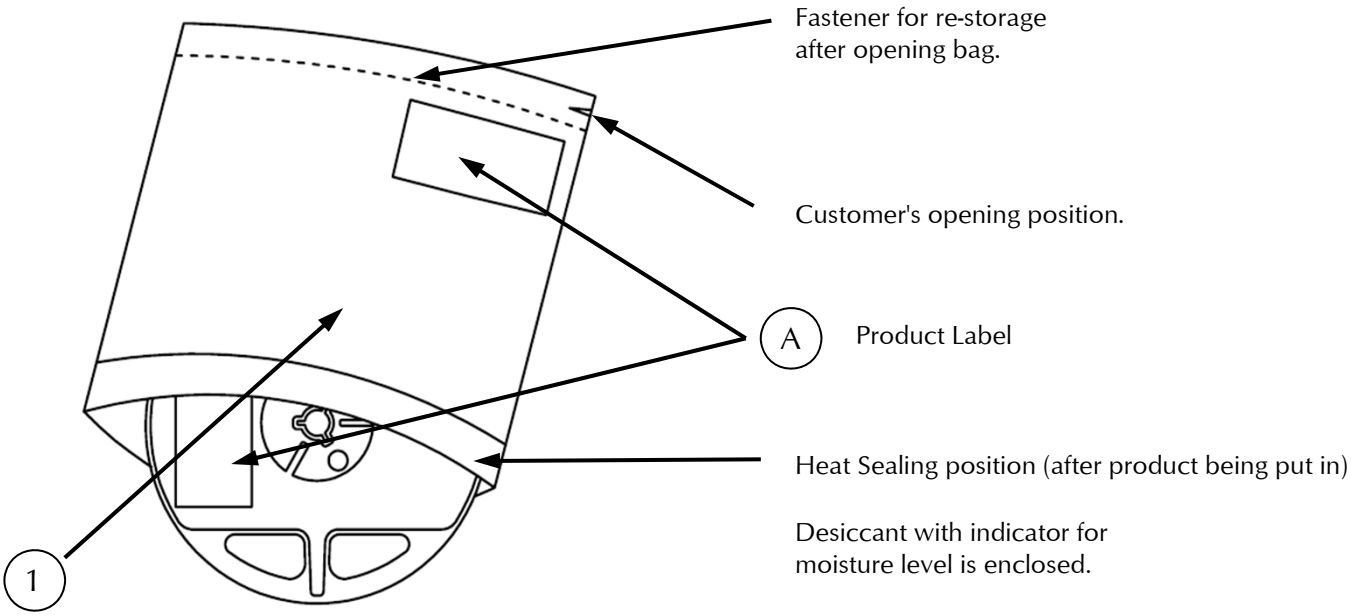

NO.	PART NAME	MATELRIAL	REMARKS
①	Moisture-proof bag with Aluminum layer	PET+Al+PE	with ESD protection

【Flow Chart-package Opening to Mounting】

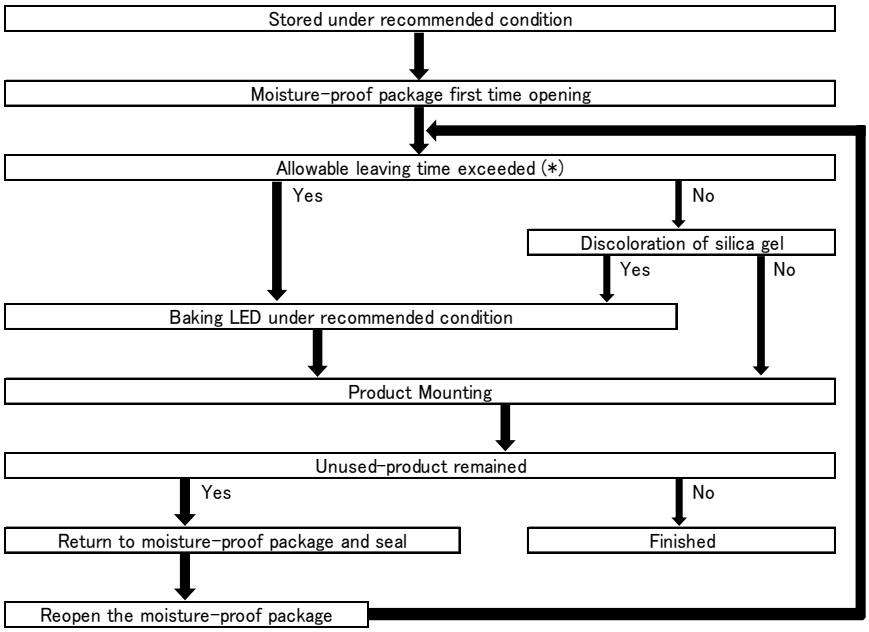

Allowable leaving time means the maximum allowable leaving time after opening package, which depends on each LED type.
The allowable leaving time should be calculated form the first opening of package to the time when soldering process is finished.
When judging if the allowable leaving time has exceeded or not, please subtract the soldering time. The allowable leaving time after reopening should be calculated form the first opening of package, or from the time when baking process is finished.

【Packing box】

(RoHS･ELV Compliant)

Box TYPE	Outline dimension L × W × H (mm)	Capacity of the box
Type A	280 × 265 × 45	2 reels
Type B	310 × 235 × 265	10 reels
Type C	440 × 310 × 265	20 reels

The above measure is all the reference value.

The box is selected out of the above table by shipping quantity.

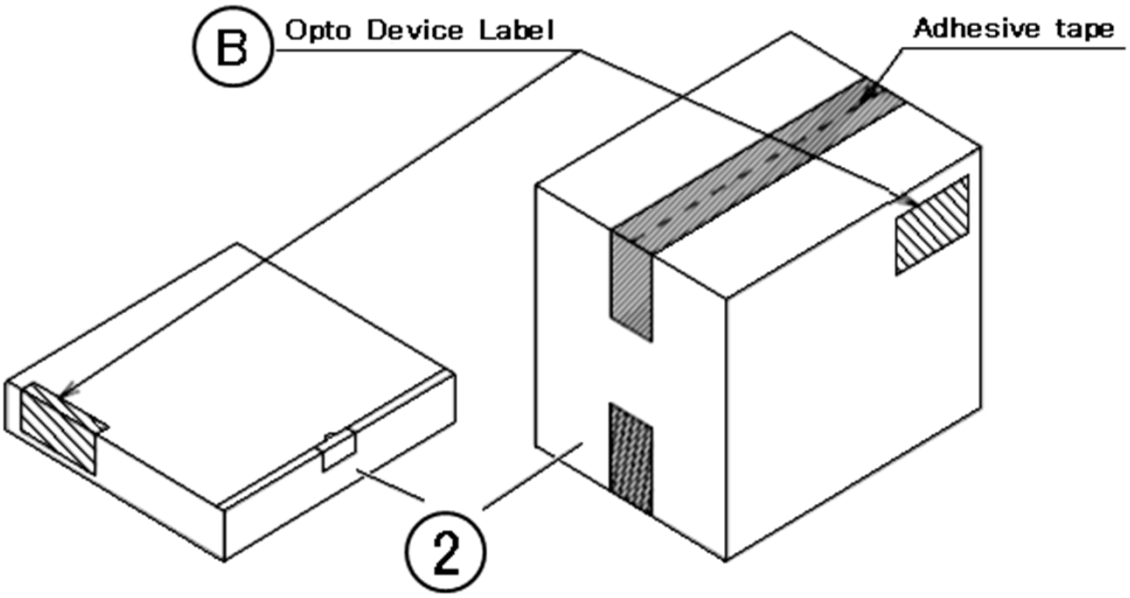

Type A

Material / box : Cardboard C5BF

Type B,C

Material / box : Cardboard K5AF

Partition : Cardboard K5AF

【Label Specification】

(acc.to JIS-X0503(Code-39))

(A) Product label

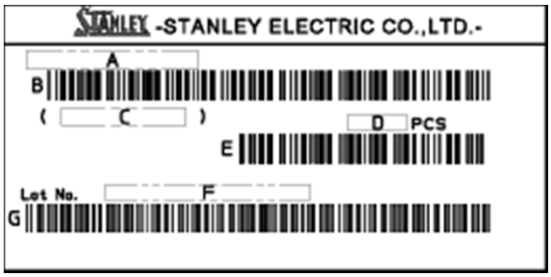

A. Parts number

B. Bar-code for parts number

C. Parts code (In-house identification code for each parts number)

D. Packed parts quantity

E. Bar-Code for packed parts quantity

F. Lot number & Rank

(Please refer to Lot Number Notational System for details)

G. Bar-Code for Lot number & Rank

(B) Opto device label

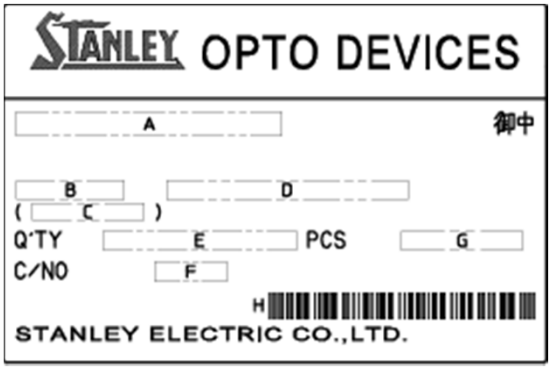

A. Customer Name

B. Parts Type

C. Parts Code

D. Parts Number

E. Packed Parts Quantity

F. Carton Number

G. Shipping Date

H. Bar-Code for In-house identification Number

<Remark> Bar-code font : acc.to Code-39(JIX0503)

(acc.to JIS-C0806-03)

【Appearance】

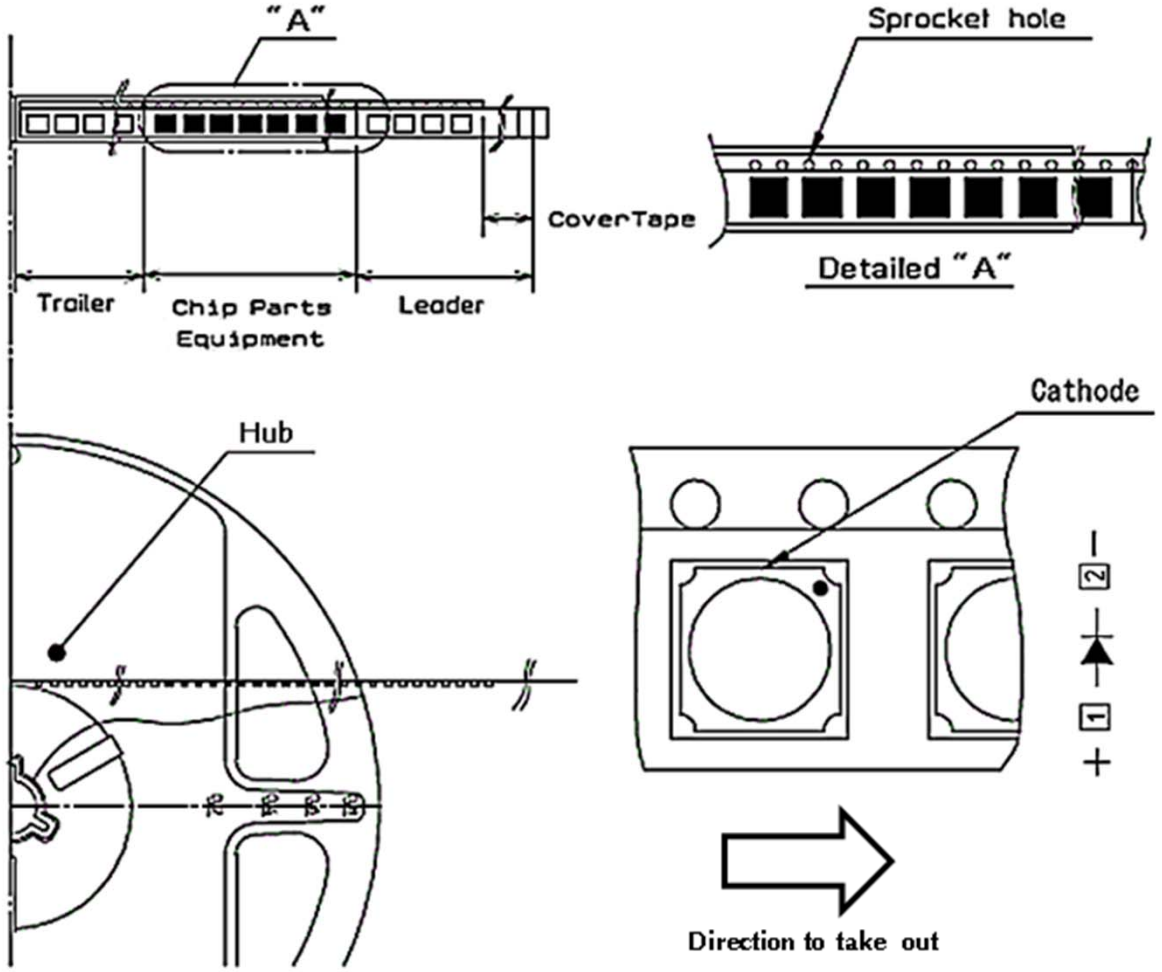

Note
"-TR" means Cathode Side of LEDs should be placed on the sprocket-hole side.

Items		Specifications	Remarks
Leader area	Cover-tape	Cover-tape shall be longer than 320mm without carrier-tape	The end of cover-tape shall be held with adhesive tape.
	Carrier-tape	Empty pocket shall be more than 13 pieces.(100mm)	Taping & reel orientation is ; please refer to the above figure.
Trailer area		Empty pocket shall be more than 20 pieces.(160mm)	The end of taping shall be inserted into a slit of the hub.

(acc.to JIS-C0806-03)

【 Qty. per Reel】

1,000parts/reel

Minimum Qty. per reel might be 100 parts when getting less than 1,000 parts. In such case, parts of 100-unit-qty. shall be packed in a reel and the qty. shall be identified on the label

【Mechanical strength】

Cover-tape adhesive strength shall be 0.1～1.0N
(An angle between carrier-tape and cover-tape shall be170 deg.).
Both tapes shall be so sealed that the contained parts will not come out from the tape when it is bent at a radius of 15mm.

【 Others】

Reversed-orientation, Up-side down placing, side placing and out of spec. parts mix shall not be held.
Empty Pocket per reel is assumed until 1 piece.

Unit :mm

(acc.to JIS-C0806-03)

【Taping Dimensions】

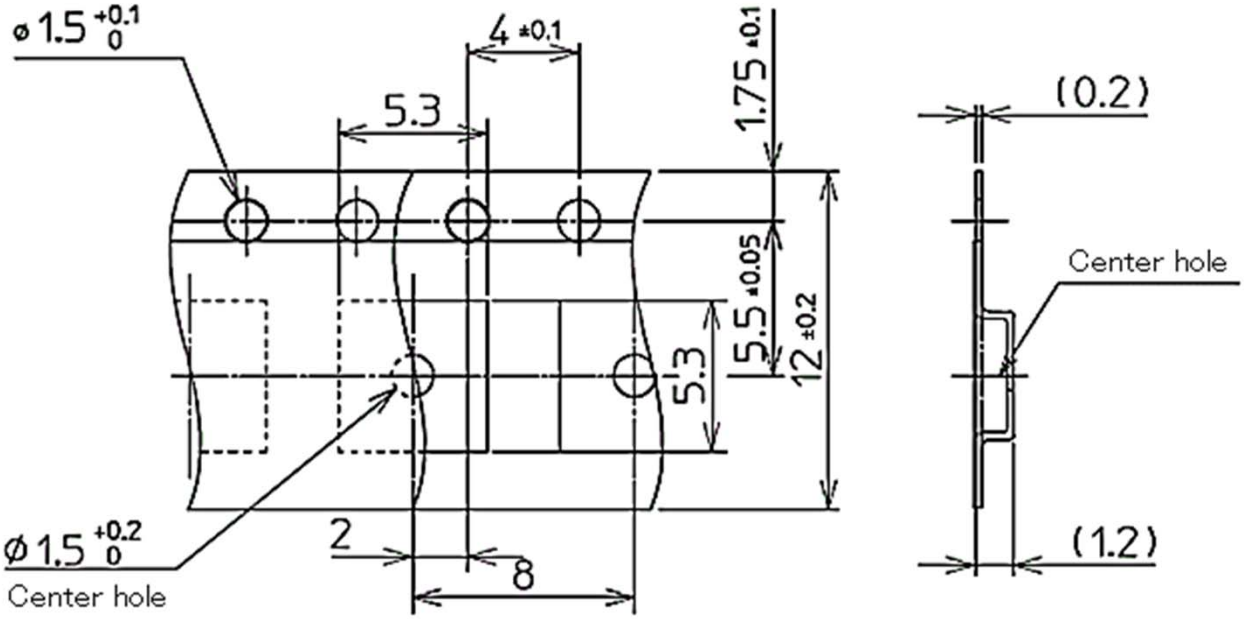

【Reel Dimensions】

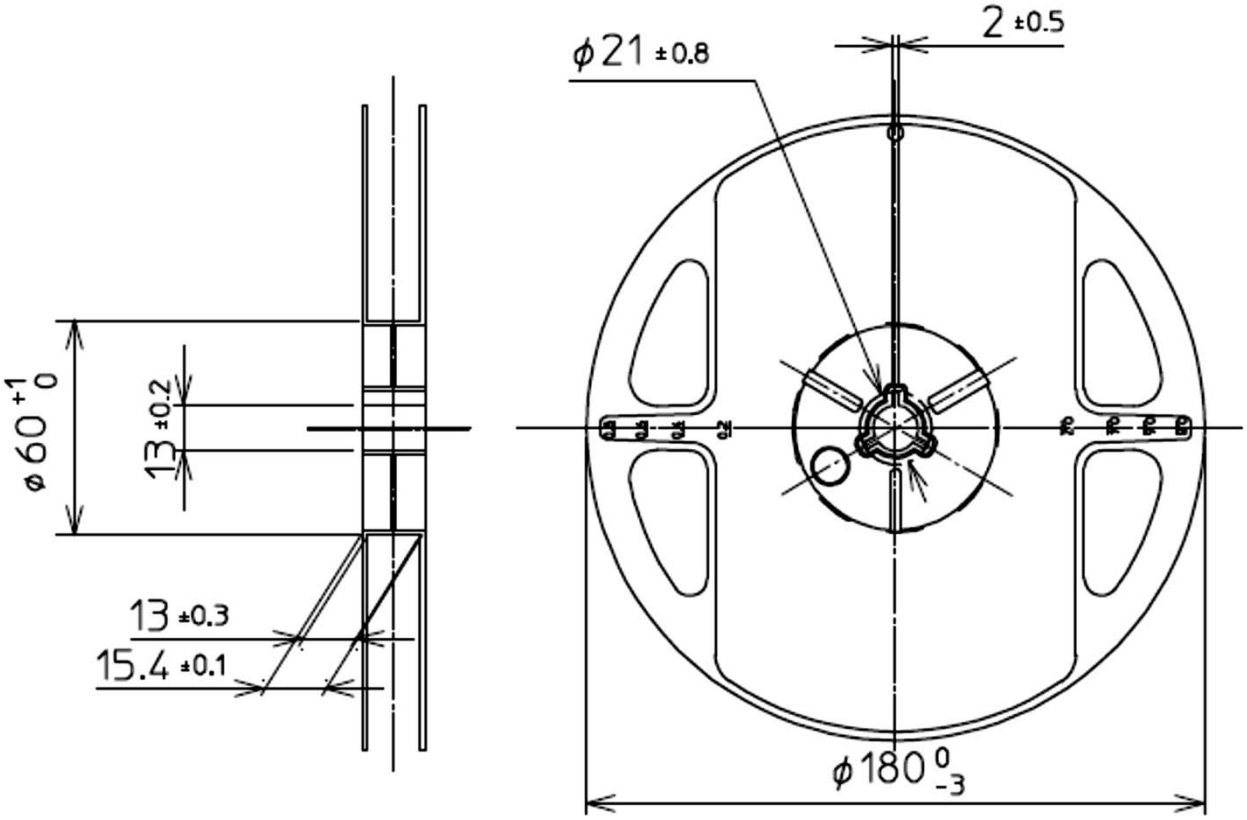

Lot Number Notational System

SPW1653JCTE-11-TR

□□□□□□□□□□□□□□□□□

① ② ③ ④ ⑤ ⑥ ⑦ ⑧ ⑨

① - 1digit : Production Location (Mark identify alphabet)

② - 1digit : Production Year (Last digit of Production Year 2009→9,2010→0,2011→1,･･･)

③ - 2digits : Production Month (Jan. to Sep. , should be 01,02,03,･････)

④ - 2digits : Production Date

⑤ - 3digits : Serial Number

⑥ - 2digits : Tape and Reel following Number

⑦ - 2digits : Luminous flux Rank.

(If luminous flux rank is 1 digit, "-" shall be dashed on the place for the second digit.
If there is no identified intensity rank, "- -" is used to indicate.)

⑧ - 2digits : Chromaticity Rank

⑨ - 1digit : VF Rank (If there is no identified VF rank, "- -" is used to indicate)

Correspondence to RoHS・ELV instruction SPW1653JCTE-11-TR

This product is in compliance with RoHS・ELV.

Prohibition substance and it's criteria value of RoHS・ELV are as follows.

・RoHS instruction ..... Refer to following (1)～(6).

・ELV instruction ..... Refer to following (1)～(4).

	Substance Group Name	Criteria Value
(1)	Lead and its compounds	1,000ppm Max
(2)	Cadmium and its compounds	100ppm Max
(3)	Mercury and its compounds	1,000ppm Max
(4)	Hexavalent chromium	1,000ppm Max
(5)	PBB	1,000ppm Max
(6)	PBDE	1,000ppm Max

1. Reliability Testing Result

Test Item	Reference Standard	Test Condition	Duration	Failure
Room Temperature Operating Life	EIAJ ED-4701 /100(101)	Ta=25℃ I_F=500mA	1,000h	0 / 20
High Temperature Operating Life	EIAJ ED-4701 /100(101)	Ta=85℃ I_F=350mA	1,000h	0 / 20
Low Temperature Operating Life	EIAJ ED-4701 /100(101)	Ta=-40℃ I_F=350mA	1,000h	0 / 20
Wet High Temperature Operating Life	EIAJ ED-4701 /100(102)	Ta=60℃ 90% I_F=350mA	1,000h	0 / 20
High Temperature Storage Life	EIAJ ED-4701 /200(201)	Ta=100℃	1,000h	0 / 20
Low Temperature Storage Life	EIAJ ED-4701 /200(202)	Ta=−40℃	1,000h	0 / 20
Wet High Temperature Storage Life	EIAJ ED-4701 /100(101)	Ta=85℃ 85%	1,000h	0 / 20
Thermal Shock	EIAJ ED-4701 /100(105)	Ta=−40℃ ～100℃ (each 15min)	1,000 cycles	0 / 20
Cycled Temperature Humidity Operating Life	EIAJ ED-4701 /200(203)	Ta=-30℃ ～ 80℃ 95% 8h/cycle I_F=350mA 5min on-off	30 cycles	0 / 20
Resistance to Reflow Soldering	EIAJ ED-4701 /300(301)	Moisture Soak : 60℃ 60% 120 Preheating : 150～180℃ 120sec MAX. Soldering : 260℃ Peak	Twice	0 / 20
Electrostatic Discharge (ESD)	EIAJ ED-4701 /300(304)	C=100pF R2=1.5kΩ ±2000V	once of each polarity	0 / 20
Vibration, Variable Frequency	EIAJ ED-4701 /400(403)	98.1m/s2(10G) 100 to 2000Hz sweep for 20min., for each direction X, Y, Z.	2h of Each direction	0 / 20

2. Failure Criteria

Item	Symbol	Condition	Failure Criteria
Luminous Flux	ϕ_V	I_F=100mA	Testing Min. Value < Initial Value × 0.5
Forward Voltage	V_F	I_F=100mA	Testing Max. Value ≧ Initial Value × 1.2
Cosmetic appearance	-	-	Notable, discoloration, deformation and cracking

Special Notice to Customers Using the Products and Technical Information Shown in This Data Sheet

1) The technical information shown in the data sheets are limited to the typical characteristics and circuit examples of the referenced products. It does not constitute the warranting of industrial property nor the granting of any license.

2) For the purpose of product improvement, the specifications, characteristics and technical data described in the data sheets are subject to change without prior notice. Therefore it is recommended that the most updated specifications be used in your design.

3) When using the products described in the data sheets, please adhere to the maximum ratings for operating voltage, heat dissipation characteristics, and other precautions for use. We are not responsible for any damage which may occur if these specifications are exceeded.

4) The products that have been described to this catalog are manufactured so that they will be used for the electrical instrument of the benchmark (OA equipment, telecommunications equipment, AV machine, home appliance and measuring instrument).
The application of aircrafts, space borne application, transportation equipment, medical equipment and nuclear power control equipment, etc. needs a high reliability and safety, and the breakdown and the wrong operation might influence the life or the human body. Please consult us beforehand if you plan to use our product for the usages of aircrafts, space borne application, transportation equipment, medical equipment and nuclear power control equipment, etc. except OA equipment, telecommunications equipment, AV machine, home appliance and measuring instrument.

5) In order to export the products or technologies described in this data sheet which are under the "Foreign Exchange and Foreign Trade Control Law," it is necessary to first obtain an export permit from the Japanese government.

6) No part of this data sheet may be reprinted or reproduced without prior written permission from Stanley Electric Co., Ltd.

7) The most updated edition of this data sheet can be obtained from the address below:
http://www.stanley-components.com/en