XLamp® MX-3 LEDs

PRODUCT DESCRIPTION

The XLamp® MX-3 LED provides the proven lighting-class performance and reliability of XLamp LEDs in a flat-top PLCC package. The XLamp MX-3 LED continues Cree LED's history of innovation in LEDs for lighting applications with a wide viewing angle, unlimited floor life, uniform light output without secondary optics and electrically neutral thermal path.

The XLamp MX-3 LED brings high performance and quality of light to a wide range of lighting applications, including linear lighting, LED light bulbs, fluorescent retrofits and retail-display lighting.

FEATURES

- Available in white (2600 K to 8300 K CCT)
- Maximum drive current: 500 mA
- Wide viewing angle: 120°
- Electrically neutral thermal path
- Qualification at maximum drive current
- RoHS and REACh compliant
- UL® recognized component (E349212)

TABLE OF CONTENTS

Characteristics 2
Flux Characteristics 2
Flux Characteristics - Cool White 3
Flux Characteristics - Warm White 4
Relative Spectral Power Distribution 6
Relative Flux vs. Junction Temperature 6
Electrical Characteristics 7
Relative Flux vs. Current 7
Typical Spatial Distribution 8
Thermal Design 8
Performance Groups - Brightness 9
Performance Groups - Forward Voltage 9
Performance Groups - Chromaticity 10
Standard Chromaticity Regions Plotted on the 1931 CIE Curve 13
Bin and Order-Code Formats 14
Reflow Soldering Characteristics 15
Notes 16
Mechanical Dimensions 18
Tape and Reel 19
Packaging 20

Cree LED / 4400 Silicon Drive / Durham, NC 27703 USA / +1.919.313.5330 / www.cree-led.com

© 2010-2021 Cree LED. The information in this document is subject to change without notice. Cree® and the Cree logo are registered trademarks, and the Cree LED logo is a trademark, of Wolfspeed, Inc. XLamp® is a registered trademark of Cree LED. UL® and the UL logo are registered trademarks of UL LLC.

CHARACTERISTICS

Characteristics	Unit	Minimum	Typical	Maximum
Thermal resistance, junction to solder point	°C/W		11	
Viewing angle (FWHM)	degrees		120	
Temperature coefficient of voltage	mV/ °C		-2.7	
ESD classification (HBM per Mil-Std-883D)			Class 2	
DC forward current	mA			500
Reverse voltage	V			1
Reverse current	mA			-0.1
Forward voltage (@ 350 mA)	V		3.7	4.0
LED junction temperature	°C			150

© 2010-2021 Cree LED. The information in this document is subject to change without notice. Cree® and the Cree logo are registered trademarks, and the Cree LED logo is a trademark, of Wolfspeed, Inc. XLamp® is a registered trademark of Cree LED. UL® and the UL logo are registered trademarks of UL LLC.

FLUX CHARACTERISTICS - COOL WHITE (T_J = 25 °C)

The following tables provide order codes for XLamp MX-3 LEDs. For a complete description of the order-code nomenclature, please consult the Bin and Order Code Formats section (page 14).

Minimum Luminous Flux @ 350 mA		Calculated Minimum Luminous Flux @ 300 mA*	Chromaticity Regions	Order Code	CCT
Group	Flux (lm)	Flux (lm)			
Q2	87.4	77	2C,2D,2U,2T,3A,3B,3C,3D,3R,3S,3T,3U,4A,4B,4R,4S	MX3AWT-A1-0000-000ADZ	5000 K
			3A,3B,3C,3D,4A,4B,4C,4D	MX3AWT-A1-0000-000AB1	4750 K
			3A,3B,3C,3D	MX3AWT-A1-0000-000AE3	5000 K
			3C,3D,4A,4B	MX3AWT-A1-0000-000AF4	4750 K
			4A,4B,4C,4D	MX3AWT-A1-0000-000AE4	4500 K
			4C,4D,5A1,5A2,5A3,5A4,5B1,5B2,5B3,5B4	MX3AWT-A1-0000-000AF5	4300 K
Q3	93.9	82	0A,0B,0C,0D,0R,0S,0T,0U,1A,1B,1C,1D,1R,1S,1T,1U,2A,2B,2C,2D,2R,2S,2T,2U,3A,3B,3R,3S	MX3AWT-A1-0000-000B51	6500 K
			1A,1B,1C,1D,1R,1S,1T,1U,2A,2B,2C,2D,2R,2S,2T,3A,3B,3S	MX3AWT-A1-0000-000B53	6000 K
			1A,1B,1C,1D,2A,2B,2C,2D	MX3AWT-A1-0000-000B50	6000 K
			2C,2D,2U,2T,3A,3B,3C,3D,3R,3S,3T,3U,4A,4B,4R,4S	MX3AWT-A1-0000-000BDZ	5000 K
			3A,3B,3C,3D,4A,4B,4C,4D	MX3AWT-A1-0000-000BB1	4750 K
			3A,3B,3C,3D	MX3AWT-A1-0000-000BE3	5000 K
			3C,3D,4A,4B	MX3AWT-A1-0000-000BF4	4750 K
			4A,4B,4C,4D	MX3AWT-A1-0000-000BE4	4500 K
			4C,4D,5A1,5A2,5A3,5A4,5B1,5B2,5B3,5B4	MX3AWT-A1-0000-000BF5	4300 K
Q4	100	87	0A,0B,0C,0D,0R,0S,0T,0U,1A,1B,1C,1D,1R,1S,1T,1U,2A,2B,2C,2D,2R,2S,2T,2U,3A,3B,3R,3S	MX3AWT-A1-0000-000C51	6500 K
			1A,1B,1C,1D,1R,1S,1T,1U,2A,2B,2C,2D,2R,2S,2T,3A,3B,3S	MX3AWT-A1-0000-000C53	6000 K
			1A,1B,1C,1D,2A,2B,2C,2D	MX3AWT-A1-0000-000C50	6000 K
			2C,2D,2U,2T,3A,3B,3C,3D,3R,3S,3T,3U,4A,4B,4R,4S	MX3AWT-A1-0000-000CDZ	5000 K
			3A,3B,3C,3D	MX3AWT-A1-0000-000CE3	5000 K
			3C,3D,4A,4B	MX3AWT-A1-0000-000CF4	4750 K
			4A,4B,4C,4D	MX3AWT-A1-0000-000CE4	4500 K
			4C,4D,5A1,5A2,5A3,5A4,5B1,5B2,5B3,5B4	MX3AWT-A1-0000-000CF5	4300 K
Q5	107	93.9	0A,0B,0C,0D,0R,0S,0T,0U,1A,1B,1C,1D,1R,1S,1T,1U,2A,2B,2C,2D,2R,2S,2T,2U,3A,3B,3R,3S	MX3AWT-A1-0000-000D51	6500 K
			1A,1B,1C,1D,1R,1S,1T,1U,2A,2B,2C,2D,2R,2S,2T,3A,3B,3S	MX3AWT-A1-0000-000D53	6000 K
			1A,1B,1C,1D,2A,2B,2C,2D	MX3AWT-A1-0000-000D50	6000 K
			2C,2D,2U,2T,3A,3B,3C,3D,3R,3S,3T,3U,4A,4B,4R,4S	MX3AWT-A1-0000-000DDZ	5000 K
			3A,3B,3C,3D	MX3AWT-A1-0000-000DE3	5000 K
			3C,3D,4A,4B	MX3AWT-A1-0000-000DF4	4750 K
			4A,4B,4C,4D	MX3AWT-A1-0000-000DE4	4500 K

Notes:

- Cree LED maintains a tolerance of ±7% on flux and power measurements, ±0.005 on chromaticity (CCx, CCy) measurements and ±2 on CRI measurements. See the Measurements section (page 16).
- XLamp MX-3 LED order codes specify only a minimum flux bin and not a maximum. LED Cree may ship reels in flux bins higher than the minimum specified by the order code without advance notice. Shipments will always adhere to the chromaticity or DWL bin restrictions specified by the order code.
- Typical CRI for Cool White (4300 K – 8300 K CCT) is 75.
- Typical CRI for Warm White (2600 K – 4300 K CCT) is 80.

* Calculated values for reference purposes only.

© 2010-2021 Cree LED. The information in this document is subject to change without notice. Cree® and the Cree logo are registered trademarks, and the Cree LED logo is a trademark, of Wolfspeed, Inc. XLamp® is a registered trademark of Cree LED. UL® and the UL logo are registered trademarks of UL LLC.

FLUX CHARACTERISTICS - COOL WHITE (T_J = 25 °C) - CONTINUED

Minimum Luminous Flux @ 350 mA		Calculated Minimum Luminous Flux @ 300 mA*	Chromaticity Regions	Order Code	CCT
Group	Flux (lm)	Flux (lm)			
R2	114	100	0A,0B,0C,0D,0R,0S,0T,0U,1A,1B,1C,1D,1R,1S,1T,1U,2A,2B,2C,2D,2R,2S,2T,2U,3A,3B,3R,3S	MX3AWT-A1-0000-000E51	6500 K
			1A,1B,1C,1D,1R,1S,1T,1U,2A,2B,2C,2D,2R,2S,2T,3A,3B,3S	MX3AWT-A1-0000-000E53	6000 K
			1A,1B,1C,1D,2A,2B,2C,2D	MX3AWT-A1-0000-000E50	6000 K

FLUX CHARACTERISTICS - WARM WHITE (T_J = 25 °C)

Minimum Luminous Flux @ 350 mA		Calculated Minimum Luminous Flux @ 300 mA*	Chromaticity Regions	Order Code	CCT
Group	Flux (lm)	Flux (lm)			
P2	67.2	59	7C1,7C2,7C3,7C4,7D1,7D2,7D3,7D4,8A1,8A2,8A3,8A4,8B1,8B2,8B3,8B4	MX6AWT-A1-0000-0007F8	2900 K
			8A1,8A2,8A3,8A4,8B1,8B2,8B3,8B4,8C1,8C2,8C3,8C4,8D1,8D2,8D3,8D4	MX6AWT-A1-0000-0007E8	2700 K
P3	73.9	65	5C1,5C2,5C3,5C4,5D1,5D2,5D3,5D4,6A1,6A2,6A3,6A4,6B1,6B2,6B3,6B4	MX3AWT-A1-0000-0008F6	3700 K
			6A1,6A2,6A3,6A4,6B1,6B2,6B3,6B4,6C1,6C2,6C3,6C4,6D1,6D2,6D3,6D4	MX3AWT-A1-0000-0008E6	3500 K
			6C1,6C2,6C3,6C4,6D1,6D2,6D3,6D4,7A1,7A2,7A3,7A4,7B1,7B2,7B3,7B4	MX3AWT-A1-0000-0008F7	3200 K
			7A1,7A2,7A3,7A4,7B1,7B2,7B3,7B4,7C(1,7C2,7C3,7C4,7D1,7D2,7D3,7D4	MX3AWT-A1-0000-0008E7	3000 K
			7C1,7C2,7C3,7C4,7D1,7D2,7D3,7D4,8A1,8A2,8A3,8A4,8B1,8B2,8B3,8B4	MX3AWT-A1-0000-0008F8	2900 K
			8A1,8A2,8A3,8A4,8B1,8B2,8B3,8B4,8C1,8C2,8C3,8C4,8D1,8D2,8D3,8D4	MX3AWT-A1-0000-0008E8	2700 K
P4	80.6	70	5C1,5C2,5C3,5C4,5D1,5D2,5D3,5D4,6A1,6A2,6A3,6A4,6B1,6B2,6B3,6B4	MX3AWT-A1-0000-0009F6	3700 K
			6A1,6A2,6A3,6A4,6B1,6B2,6B3,6B4,6C1,6C2,6C3,6C4,6D1,6D2,6D3,6D4	MX3AWT-A1-0000-0009E6	3500 K
			6C1,6C2,6C3,6C4,6D1,6D2,6D3,6D4,7A1,7A2,7A3,7A4,7B1,7B2,7B3,7B4	MX3AWT-A1-0000-0009F7	3200 K
			7A1,7A2,7A3,7A4,7B1,7B2,7B3,7B4,7C1,7C2,7C3,7C4,7D1,7D2,7D3,7D4	MX3AWT-A1-0000-0009E7	3000 K
			7C1,7C2,7C3,7C4,7D1,7D2,7D3,7D4,8A1,8A2,8A3,8A4,8B1,8B2,8B3,8B4	MX3AWT-A1-0000-0009F8	2900 K
			8A1,8A2,8A3,8A4,8B1,8B2,8B3,8B4,8C1,8C2,8C3,8C4,8D1,8D2,8D3,8D4	MX3AWT-A1-0000-0009E8	2700 K
Q2	87.4	76	4C,4D,5A1,5A2,5A3,5A4,5B1,5B2,5B3,5B4	MX3AWT-A1-0000-000AF5	4300 K
			5A1,5A2,5A3,5A4,5B1,5B2,5B3,5B4,5C1,5C2,5C3,5C4,5D1,5D2,5D3,5D4	MX3AWT-A1-0000-000AE5	4000 K
			5C1,5C2,5C3,5C4,5D1,5D2,5D3,5D4,6A1,6A2,6A3,6A4,6B1,6B2,6B3,6B4	MX3AWT-A1-0000-000AF6	3700 K
			6A1,6A2,6A3,6A4,6B1,6B2,6B3,6B4,6C1,6C2,6C3,6C4,6D1,6D2,6D3,6D4	MX3AWT-A1-0000-000AE6	3500 K
			6C1,6C2,6C3,6C4,6D1,6D2,6D3,6D4,7A1,7A2,7A3,7A4,7B1,7B2,7B3,7B4	MX3AWT-A1-0000-000AF7	3200 K
			7A1,7A2,7A3,7A4,7B1,7B2,7B3,7B4,7C1,7C2,7C3,7C4,7D1,7D2,7D3,7D4	MX3AWT-A1-0000-000AE7	3000 K
			7C1,7C2,7C3,7C4,7D1,7D2,7D3,7D4,8A1,8A2,8A3,8A4,8B1,8B2,8B3,8B4	MX3AWT-A1-0000-000AF8	2900 K
			8A1,8A2,8A3,8A4,8B1,8B2,8B3,8B4,8C1,8C2,8C3,8C4,8D1,8D2,8D3,8D4	MX3AWT-A1-0000-000AE8	2700 K

Notes:

- Cree LED maintains a tolerance of ±7% on flux and power measurements, ±0.005 on chromaticity (CCx, CCy) measurements and ±2 on CRI measurements. See the Measurements section (page 16).
- XLamp MX-3 LED order codes specify only a minimum flux bin and not a maximum. LED Cree may ship reels in flux bins higher than the minimum specified by the order code without advance notice. Shipments will always adhere to the chromaticity or DWL bin restrictions specified by the order code.
- Typical CRI for Cool White (4300 K – 8300 K CCT) is 75.
- Typical CRI for Warm White (2600 K – 4300 K CCT) is 80.

* Calculated values for reference purposes only.

© 2010-2021 Cree LED. The information in this document is subject to change without notice. Cree® and the Cree logo are registered trademarks, and the Cree LED logo is a trademark, of Wolfspeed, Inc. XLamp® is a registered trademark of Cree LED. UL® and the UL logo are registered trademarks of UL LLC.

FLUX CHARACTERISTICS - WARM WHITE (T_J = 25 °C) - CONTINUED

Minimum Luminous Flux @ 350 mA		Calculated Minimum Luminous Flux @ 300 mA*	Chromaticity Regions	Order Code	CCT
Group	Flux (lm)	Flux (lm)			
Q3	93.9	82	4C,4D,5A1,5A2,5A3,5A4,5B1,5B2,5B3,5B4	MX3AWT-A1-0000-000BF5	4300 K
			5A1,5A2,5A3,5A4,5B1,5B2,5B3,5B4,5C1,5C2,5C3,5C4,5D1,5D2,5D3,5D4	MX3AWT-A1-0000-000BE5	4000 K
			5C1,5C2,5C3,5C4,5D1,5D2,5D3,5D4,6A1,6A2,6A3,6A4,6B1,6B2,6B3,6B4	MX3AWT-A1-0000-000BF6	3700 K
			6A1,6A2,6A3,6A4,6B1,6B2,6B3,6B4,6C1,6C2,6C3,6C4,6D1,6D2,6D3,6D4	MX3AWT-A1-0000-000BE6	3500 K
			6C1,6C2,6C3,6C4,6D1,6D2,6D3,6D4,7A1,7A2,7A3,7A4,7B1,7B2,7B3,7B4	MX3AWT-A1-0000-000BF7	3200 K
			7A1,7A2,7A3,7A4,7B1,7B2,7B3,7B4,7C1,7C2,7C3,7C4,7D1,7D2,7D3,7D4	MX3AWT-A1-0000-000BE7	3000 K
Q4	100	87	4C,4D,5A1,5A2,5A3,5A4,5B1,5B2,5B3,5B4	MX3AWT-A1-0000-000CF5	4300 K
			5A1,5A2,5A3,5A4,5B1,5B2,5B3,5B4,5C1,5C2,5C3,5C4,5D1,5D2,5D3,5D4	MX3AWT-A1-0000-000CE5	4000 K

Notes:

- Cree LED maintains a tolerance of ±7% on flux and power measurements, ±0.005 on chromaticity (CCx, CCy) measurements and ±2 on CRI measurements. See the Measurements section (page 16).
- XLamp MX-3 LED order codes specify only a minimum flux bin and not a maximum. LED Cree may ship reels in flux bins higher than the minimum specified by the order code without advance notice. Shipments will always adhere to the chromaticity or DWL bin restrictions specified by the order code.
- Typical CRI for Cool White (4300 K – 8300 K CCT) is 75.
- Typical CRI for Warm White (2600 K – 4300 K CCT) is 80.

* Calculated values for reference purposes only.

© 2010-2021 Cree LED. The information in this document is subject to change without notice. Cree® and the Cree logo are registered trademarks, and the Cree LED logo is a trademark, of Wolfspeed, Inc. XLamp® is a registered trademark of Cree LED. UL® and the UL logo are registered trademarks of UL LLC.

RELATIVE SPECTRAL POWER DISTRIBUTION

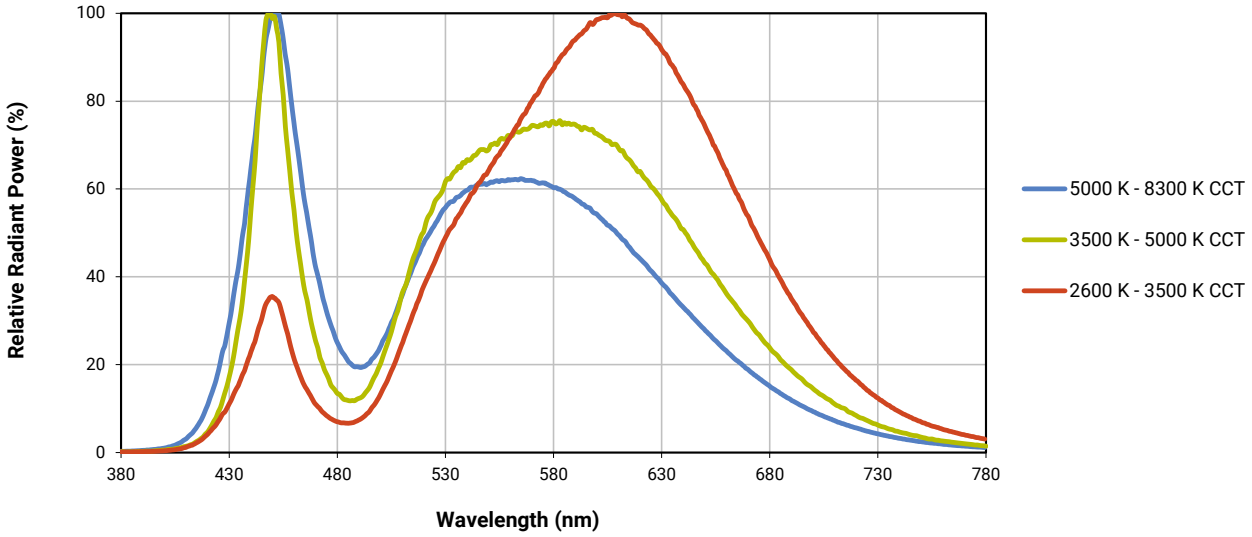

RELATIVE FLUX VS. JUNCTION TEMPERATURE (I_F = 350 mA)

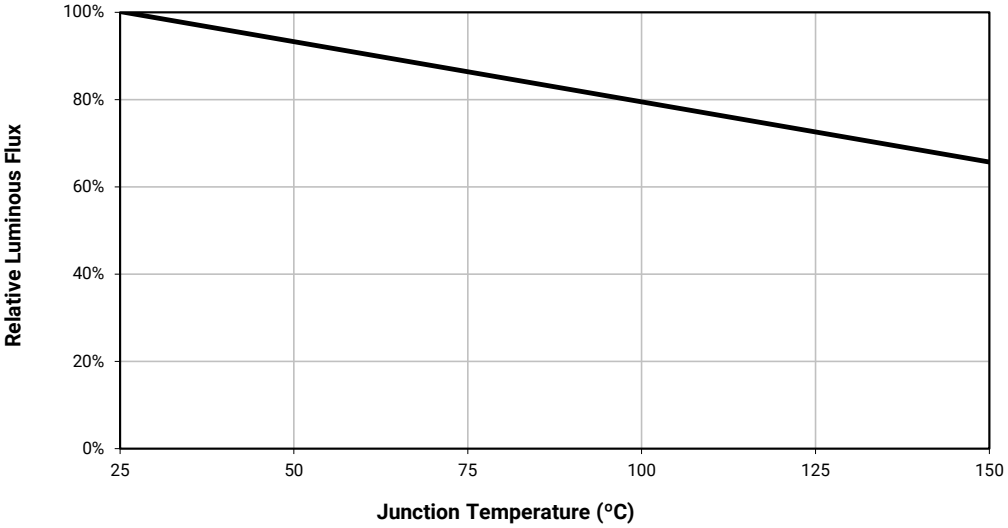

© 2010-2021 Cree LED. The information in this document is subject to change without notice. Cree® and the Cree logo are registered trademarks, and the Cree LED logo is a trademark, of Wolfspeed, Inc. XLamp® is a registered trademark of Cree LED. UL® and the UL logo are registered trademarks of UL LLC.

ELECTRICAL CHARACTERISTICS (T_J = 25 °C)

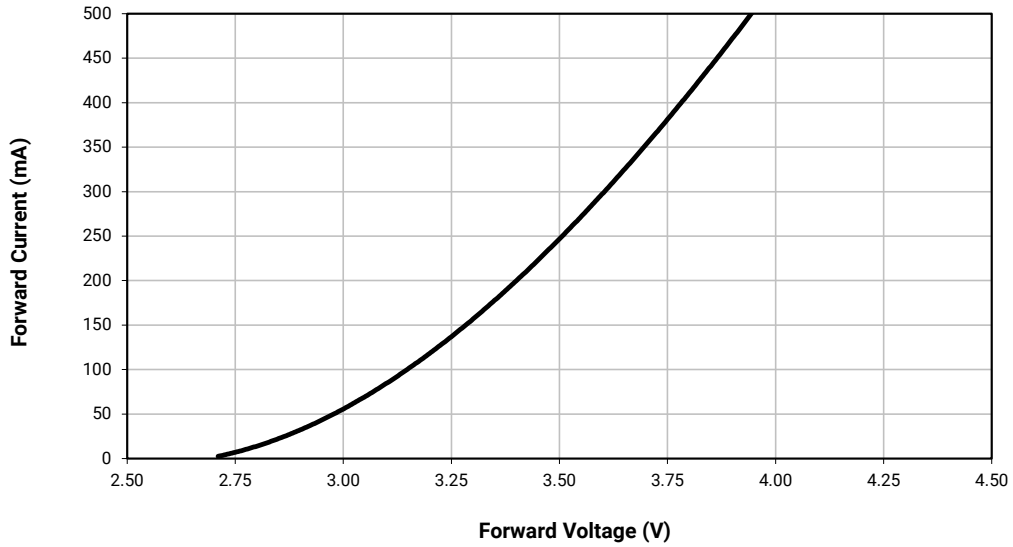

RELATIVE FLUX VS. CURRENT (T_J = 25 °C)

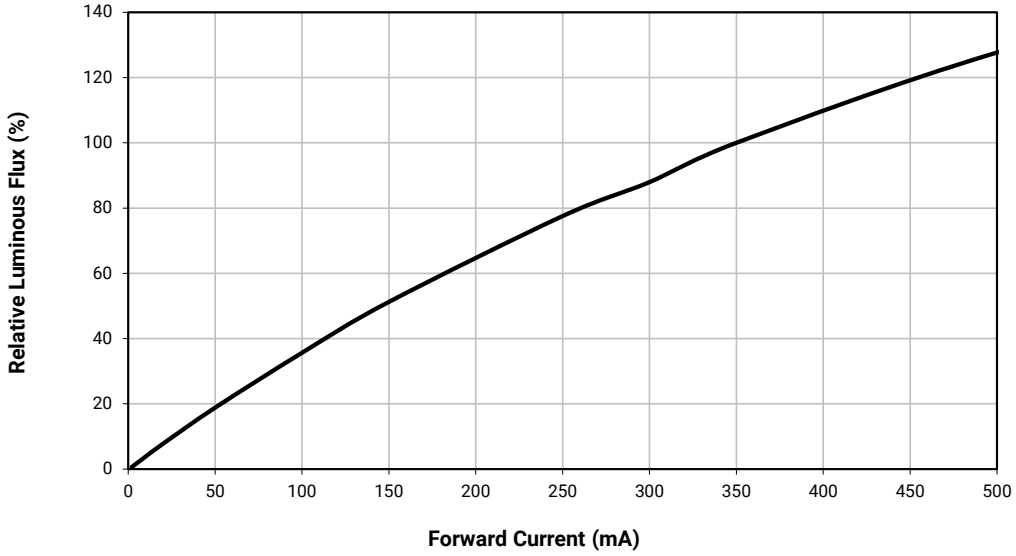

© 2010-2021 Cree LED. The information in this document is subject to change without notice. Cree® and the Cree logo are registered trademarks, and the Cree LED logo is a trademark, of Wolfspeed, Inc. XLamp® is a registered trademark of Cree LED. UL® and the UL logo are registered trademarks of UL LLC.

TYPICAL SPATIAL DISTRIBUTION

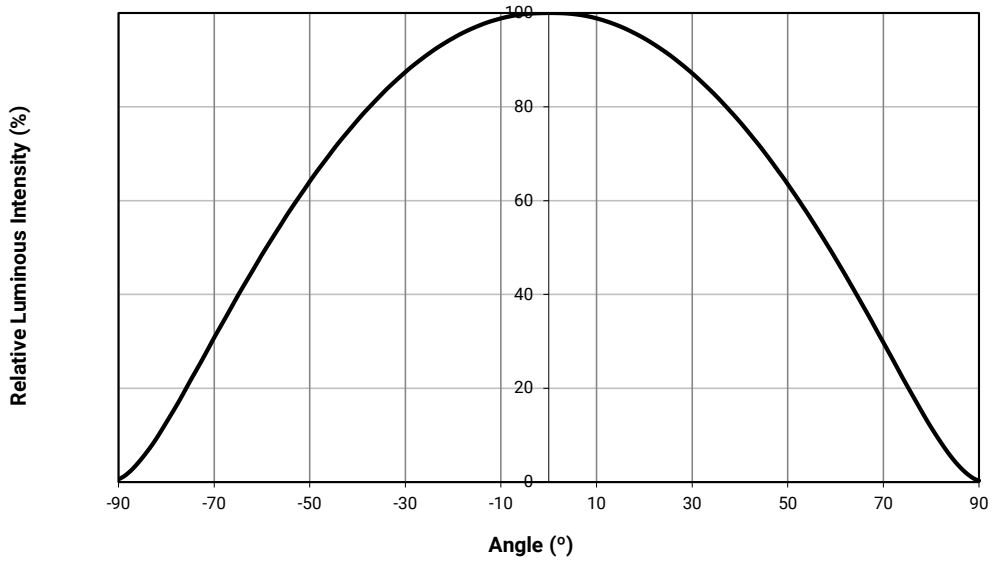

THERMAL DESIGN

The maximum forward current is determined by the thermal resistance between the LED junction and ambient. It is crucial for the end product to be designed in a manner that minimizes the thermal resistance from the solder point to ambient in order to optimize lamp life and optical characteristics.

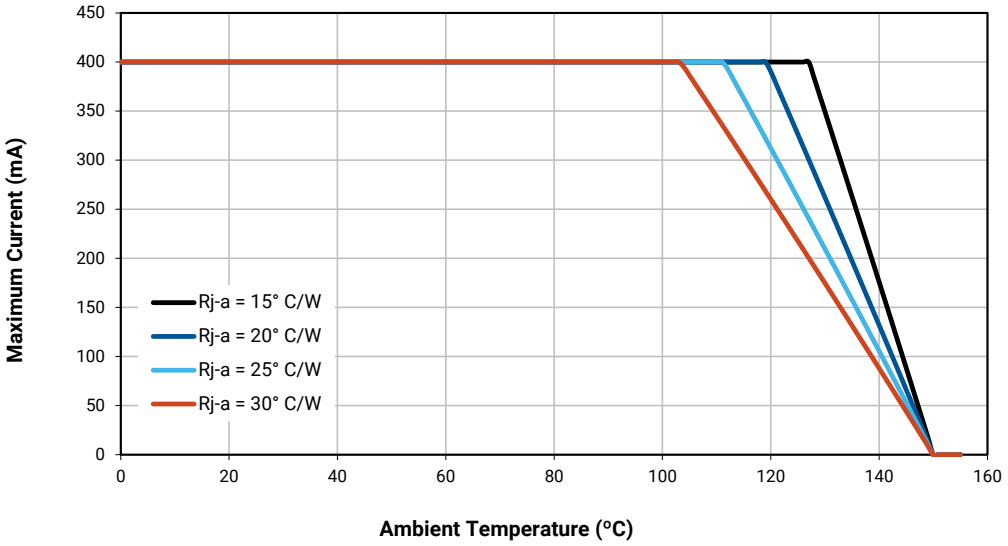

© 2010-2021 Cree LED. The information in this document is subject to change without notice. Cree® and the Cree logo are registered trademarks, and the Cree LED logo is a trademark, of Wolfspeed, Inc. XLamp® is a registered trademark of Cree LED. UL® and the UL logo are registered trademarks of UL LLC.

PERFORMANCE GROUPS - BRIGHTNESS

MX-3 LEDs are tested for luminous flux and placed into one of the following luminous-flux groups:

Group Code	Minimum Luminous Flux (lm)	Maximum Luminous Flux (lm)
P2	67.2	73.9
P3	73.9	80.6
P4	80.6	87.4
Q2	87.4	93.9
Q3	93.9	100
Q4	100	107
Q5	107	114
R2	114	122
R3	122	130

PERFORMANCE GROUPS - FORWARD VOLTAGE

MX-3 Group Code	Minimum Voltage @ 350 mA	Maximum Voltage @ 350 mA
D	2.8	3.2
E	3.2	3.6
F	3.6	4.0
0	No V_F Binning	

© 2010-2021 Cree LED. The information in this document is subject to change without notice. Cree® and the Cree logo are registered trademarks, and the Cree LED logo is a trademark, of Wolfspeed, Inc. XLamp® is a registered trademark of Cree LED. UL® and the UL logo are registered trademarks of UL LLC.

PERFORMANCE GROUPS - CHROMATICITY

Region	x	y	Region	x	y	Region	x	y	Region	x	y
0A	0.2950	0.2970	0B	0.2920	0.3060	0C	0.2984	0.3133	0D	0.2984	0.3133
	0.2920	0.3060		0.2895	0.3135		0.2962	0.3220		0.3048	0.3207
	0.2984	0.3133		0.2962	0.3220		0.3028	0.3304		0.3068	0.3113
	0.3009	0.3042		0.2984	0.3133		0.3048	0.3207		0.3009	0.3042
0R	0.2980	0.2880	0S	0.2895	0.3135	0T	0.2962	0.3220	0U	0.3037	0.2937
	0.2950	0.2970		0.2870	0.3210		0.2937	0.3312		0.3009	0.3042
	0.3009	0.3042		0.2937	0.3312		0.3005	0.3415		0.3068	0.3113
	0.3037	0.2937		0.2962	0.3220		0.3028	0.3304		0.3093	0.2993
1A	0.3048	0.3207	1B	0.3028	0.3304	1C	0.3115	0.3391	1D	0.3130	0.3290
	0.3130	0.3290		0.3115	0.3391		0.3205	0.3481		0.3213	0.3373
	0.3144	0.3186		0.3130	0.3290		0.3213	0.3373		0.3221	0.3261
	0.3068	0.3113		0.3048	0.3207		0.3130	0.3290		0.3144	0.3186
1R	0.3068	0.3113	1S	0.3005	0.3415	1T	0.3099	0.3509	1U	0.3144	0.3186
	0.3144	0.3186		0.3099	0.3509		0.3196	0.3602		0.3221	0.3261
	0.3161	0.3059		0.3115	0.3391		0.3205	0.3481		0.3231	0.3120
	0.3093	0.2993		0.3028	0.3304		0.3115	0.3391		0.3161	0.3059
2A	0.3215	0.3350	2B	0.3207	0.3462	2C	0.3290	0.3538	2D	0.3290	0.3417
	0.3290	0.3417		0.3290	0.3538		0.3376	0.3616		0.3371	0.3490
	0.3290	0.3300		0.3290	0.3417		0.3371	0.3490		0.3366	0.3369
	0.3222	0.3243		0.3215	0.3350		0.3290	0.3417		0.3290	0.3300
2R	0.3222	0.3243	2S	0.3196	0.3602	2T	0.3290	0.3690	2U	0.3290	0.3300
	0.3290	0.3300		0.3290	0.3690		0.3381	0.3762		0.3366	0.3369
	0.3290	0.3180		0.3290	0.3538		0.3376	0.3616		0.3361	0.3245
	0.3231	0.3120		0.3207	0.3462		0.3290	0.3538		0.3290	0.3180
3A	0.3371	0.3490	3B	0.3376	0.3616	3C	0.3463	0.3687	3D	0.3451	0.3554
	0.3451	0.3554		0.3463	0.3687		0.3551	0.3760		0.3533	0.3620
	0.3440	0.3427		0.3451	0.3554		0.3533	0.3620		0.3515	0.3487
	0.3366	0.3369		0.3371	0.3490		0.3451	0.3554		0.3440	0.3427
3R	0.3366	0.3369	3S	0.3381	0.3762	3T	0.3480	0.3840	3U	0.3440	0.3428
	0.3440	0.3428		0.3480	0.3840		0.3571	0.3907		0.3515	0.3487
	0.3429	0.3307		0.3463	0.3687		0.3551	0.3760		0.3495	0.3339
	0.3361	0.3245		0.3376	0.3616		0.3463	0.3687		0.3429	0.3307
4A	0.3530	0.3597	4B	0.3548	0.3736	4C	0.3641	0.3804	4D	0.3615	0.3659
	0.3615	0.3659		0.3641	0.3804		0.3736	0.3874		0.3702	0.3722
	0.3590	0.3521		0.3615	0.3659		0.3702	0.3722		0.3670	0.3578
	0.3512	0.3465		0.3530	0.3597		0.3615	0.3659		0.3590	0.3521

© 2010-2021 Cree LED. The information in this document is subject to change without notice. Cree® and the Cree logo are registered trademarks, and the Cree LED logo is a trademark, of Wolfspeed, Inc. XLamp® is a registered trademark of Cree LED. UL® and the UL logo are registered trademarks of UL LLC.

PERFORMANCE GROUPS - CHROMATICITY (CONTINUED)

Region	x	y	Region	x	y	Region	x	y	Region	x	y
4R	0.3512	0.3465	4S	0.3571	0.3907	4T	0.3668	0.3957	4U	0.3590	0.3521
	0.3590	0.3521		0.3668	0.3957		0.3771	0.4034		0.3670	0.3578
	0.3567	0.3389		0.3641	0.3804		0.3736	0.3874		0.3640	0.3440
	0.3495	0.3339		0.3548	0.3736		0.3641	0.3804		0.3567	0.3389
5A1	0.3670	0.3578	5A2	0.3686	0.3649	5A3	0.3744	0.3685	5A4	0.3726	0.3612
	0.3686	0.3649		0.3702	0.3722		0.3763	0.3760		0.3744	0.3685
	0.3744	0.3685		0.3763	0.3760		0.3825	0.3798		0.3804	0.3721
	0.3726	0.3612		0.3744	0.3685		0.3804	0.3721		0.3783	0.3646
5B1	0.3702	0.3722	5B2	0.3719	0.3797	5B3	0.3782	0.3837	5B4	0.3763	0.3760
	0.3719	0.3797		0.3736	0.3874		0.3802	0.3916		0.3782	0.3837
	0.3782	0.3837		0.3802	0.3916		0.3869	0.3958		0.3847	0.3877
	0.3763	0.3760		0.3782	0.3837		0.3847	0.3877		0.3825	0.3798
5C1	0.3825	0.3798	5C2	0.3847	0.3877	5C3	0.3912	0.3917	5C4	0.3887	0.3836
	0.3847	0.3877		0.3869	0.3958		0.3937	0.4001		0.3912	0.3917
	0.3912	0.3917		0.3937	0.4001		0.4006	0.4044		0.3978	0.3958
	0.3887	0.3836		0.3912	0.3917		0.3978	0.3958		0.3950	0.3875
5D1	0.3783	0.3646	5D2	0.3804	0.3721	5D3	0.3863	0.3758	5D4	0.3840	0.3681
	0.3804	0.3721		0.3825	0.3798		0.3887	0.3836		0.3863	0.3758
	0.3863	0.3758		0.3887	0.3836		0.3950	0.3875		0.3924	0.3794
	0.3840	0.3681		0.3863	0.3758		0.3924	0.3794		0.3898	0.3716
6A1	0.3889	0.3690	6A2	0.3915	0.3768	6A3	0.3981	0.3800	6A4	0.3953	0.3720
	0.3915	0.3768		0.3941	0.3848		0.4010	0.3882		0.3981	0.3800
	0.3981	0.3800		0.4010	0.3882		0.4080	0.3916		0.4048	0.3832
	0.3953	0.3720		0.3981	0.3800		0.4048	0.3832		0.4017	0.3751
6B1	0.3941	0.3848	6B2	0.3968	0.3930	6B3	0.4040	0.3966	6B4	0.4010	0.3882
	0.3968	0.3930		0.3996	0.4015		0.4071	0.4052		0.4040	0.3966
	0.4040	0.3966		0.4071	0.4052		0.4146	0.4089		0.4113	0.4001
	0.4010	0.3882		0.4040	0.3966		0.4113	0.4001		0.4080	0.3916
6C1	0.4080	0.3916	6C2	0.4113	0.4001	6C3	0.4186	0.4037	6C4	0.4150	0.3950
	0.4113	0.4001		0.4146	0.4089		0.4222	0.4127		0.4186	0.4037
	0.4186	0.4037		0.4222	0.4127		0.4299	0.4165		0.4259	0.4073
	0.4150	0.3950		0.4186	0.4037		0.4259	0.4073		0.4221	0.3984
6D1	0.4017	0.3751	6D2	0.4048	0.3832	6D3	0.4116	0.3865	6D4	0.4082	0.3782
	0.4048	0.3832		0.4080	0.3916		0.4150	0.3950		0.4116	0.3865
	0.4116	0.3865		0.4150	0.3950		0.4221	0.3984		0.4183	0.3898
	0.4082	0.3782		0.4116	0.3865		0.4183	0.3898		0.4147	0.3814
7A1	0.4147	0.3814	7A2	0.4183	0.3898	7A3	0.4242	0.3919	7A4	0.4203	0.3833
	0.4183	0.3898		0.4221	0.3984		0.4281	0.4006		0.4242	0.3919
	0.4242	0.3919		0.4281	0.4006		0.4342	0.4028		0.4300	0.3939
	0.4203	0.3833		0.4242	0.3919		0.4300	0.3939		0.4259	0.3853

© 2010-2021 Cree LED. The information in this document is subject to change without notice. Cree® and the Cree logo are registered trademarks, and the Cree LED logo is a trademark, of Wolfspeed, Inc. XLamp® is a registered trademark of Cree LED. UL® and the UL logo are registered trademarks of UL LLC.

PERFORMANCE GROUPS - CHROMATICITY (CONTINUED)

Region	x	y	Region	x	y	Region	x	y	Region	x	y
7B1	0.4221	0.3984	7B2	0.4259	0.4073	7B3	0.4322	0.4096	7B4	0.4281	0.4006
	0.4259	0.4073		0.4299	0.4165		0.4364	0.4188		0.4322	0.4096
	0.4322	0.4096		0.4364	0.4188		0.4430	0.4212		0.4385	0.4119
	0.4281	0.4006		0.4322	0.4096		0.4385	0.4119		0.4342	0.4028
7C1	0.4342	0.4028	7C2	0.4385	0.4119	7C3	0.4449	0.4141	7C4	0.4403	0.4049
	0.4385	0.4119		0.4430	0.4212		0.4496	0.4236		0.4449	0.4141
	0.4449	0.4141		0.4496	0.4236		0.4562	0.4260		0.4513	0.4164
	0.4403	0.4049		0.4449	0.4141		0.4513	0.4164		0.4465	0.4071
7D1	0.4259	0.3853	7D2	0.4300	0.3939	7D3	0.4359	0.3960	7D4	0.4316	0.3873
	0.4300	0.3939		0.4342	0.4028		0.4403	0.4049		0.4359	0.3960
	0.4359	0.3960		0.4403	0.4049		0.4465	0.4071		0.4418	0.3981
	0.4316	0.3873		0.4359	0.3960		0.4418	0.3981		0.4373	0.3893
8A1	0.4373	0.3893	8A2	0.4418	0.3981	8A3	0.4475	0.3994	8A4	0.4428	0.3906
	0.4418	0.3981		0.4465	0.4071		0.4523	0.4085		0.4475	0.3994
	0.4475	0.3994		0.4523	0.4085		0.4582	0.4099		0.4532	0.4008
	0.4428	0.3906		0.4475	0.3994		0.4532	0.4008		0.4483	0.3919
8B1	0.4465	0.4071	8B2	0.4513	0.4164	8B3	0.4573	0.4178	8B4	0.4523	0.4085
	0.4513	0.4164		0.4562	0.4260		0.4624	0.4274		0.4573	0.4178
	0.4573	0.4178		0.4624	0.4274		0.4687	0.4289		0.4634	0.4193
	0.4523	0.4085		0.4573	0.4178		0.4634	0.4193		0.4582	0.4099
8C1	0.4582	0.4099	8C2	0.4634	0.4193	8C3	0.4695	0.4207	8C4	0.4641	0.4112
	0.4634	0.4193		0.4687	0.4289		0.4750	0.4304		0.4695	0.4207
	0.4695	0.4207		0.4750	0.4304		0.4813	0.4319		0.4756	0.4221
	0.4641	0.4112		0.4695	0.4207		0.4756	0.4221		0.4700	0.4126
8D1	0.4483	0.3919	8D2	0.4532	0.4008	8D3	0.4589	0.4021	8D4	0.4538	0.3931
	0.4532	0.4008		0.4582	0.4099		0.4641	0.4112		0.4589	0.4021
	0.4589	0.4021		0.4641	0.4112		0.4700	0.4126		0.4646	0.4034
	0.4538	0.3931		0.4589	0.4021		0.4646	0.4034		0.4593	0.3944

© 2010-2021 Cree LED. The information in this document is subject to change without notice. Cree® and the Cree logo are registered trademarks, and the Cree LED logo is a trademark, of Wolfspeed, Inc. XLamp® is a registered trademark of Cree LED. UL® and the UL logo are registered trademarks of UL LLC.

STANDARD CHROMATICITY REGIONS PLOTTED ON THE 1931 CIE CURVE

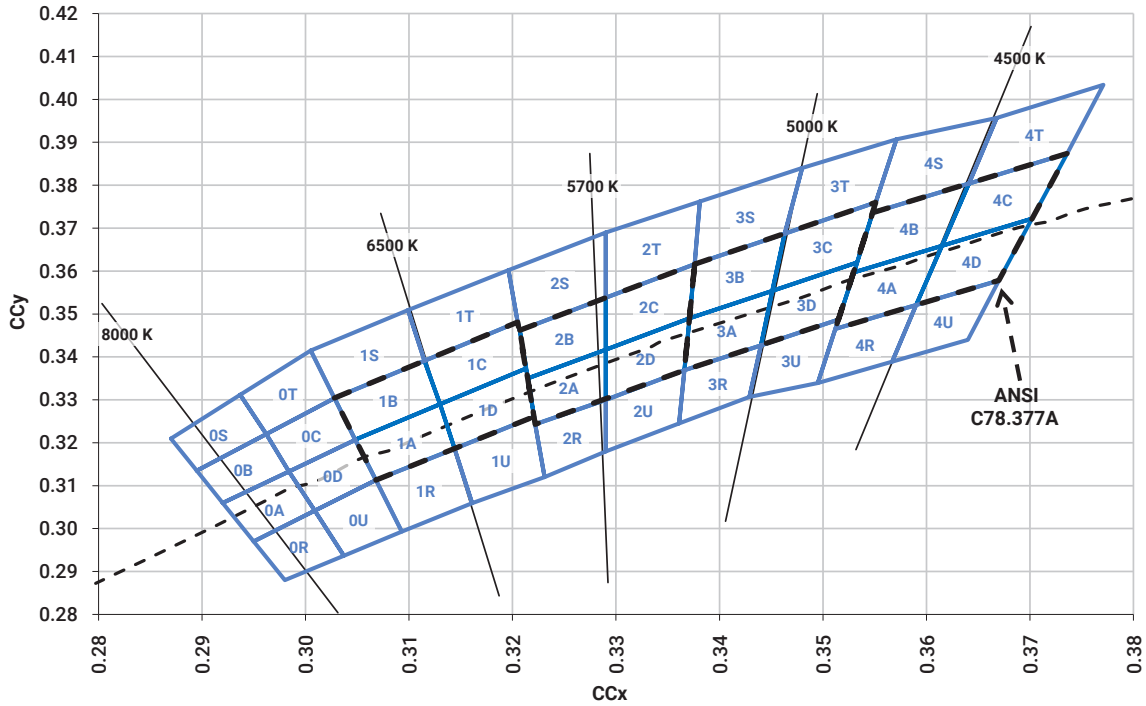

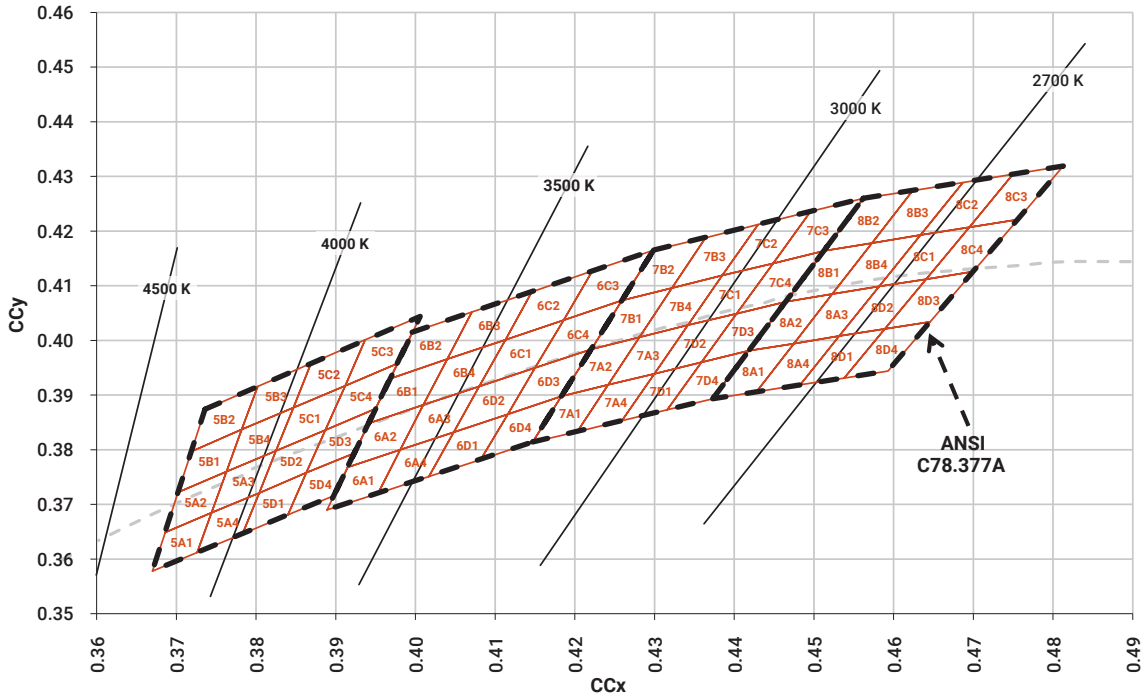

© 2010-2021 Cree LED. The information in this document is subject to change without notice. Cree® and the Cree logo are registered trademarks, and the Cree LED logo is a trademark, of Wolfspeed, Inc. XLamp® is a registered trademark of Cree LED. UL® and the UL logo are registered trademarks of UL LLC.

BIN AND ORDER-CODE FORMATS

Bin codes and order codes are configured in the following manner:

Order Code

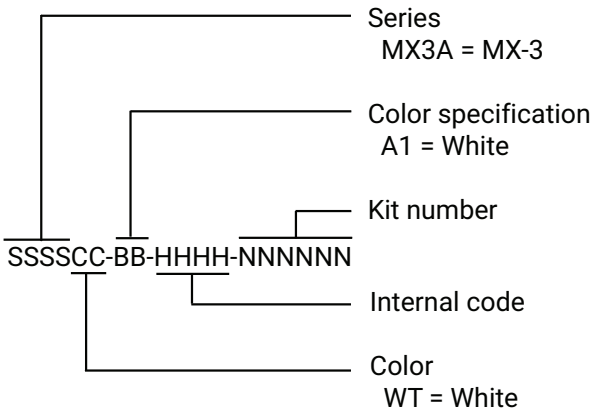

Bin Code

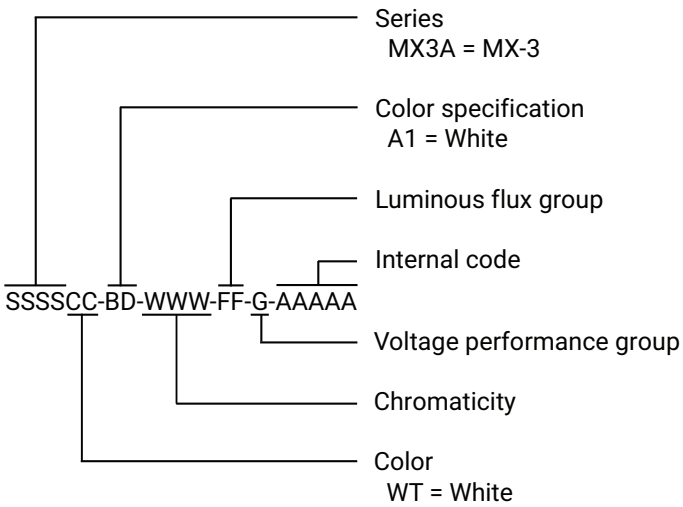

© 2010-2021 Cree LED. The information in this document is subject to change without notice. Cree® and the Cree logo are registered trademarks, and the Cree LED logo is a trademark, of Wolfspeed, Inc. XLamp® is a registered trademark of Cree LED. UL® and the UL logo are registered trademarks of UL LLC.

REFLOW SOLDERING CHARACTERISTICS

In testing, Cree LED has found XLamp MX-3 LEDs to be compatible with JEDEC J-STD-020C, using the parameters listed below. As a general guideline, Cree LED recommends that users follow the recommended soldering profile provided by the manufacturer of the solder paste used, and therefore it is the lamp or luminaire manufacturer's responsibility to determine applicable soldering requirements.

Note that this general guideline may not apply to all PCB designs and configurations of reflow soldering equipment.

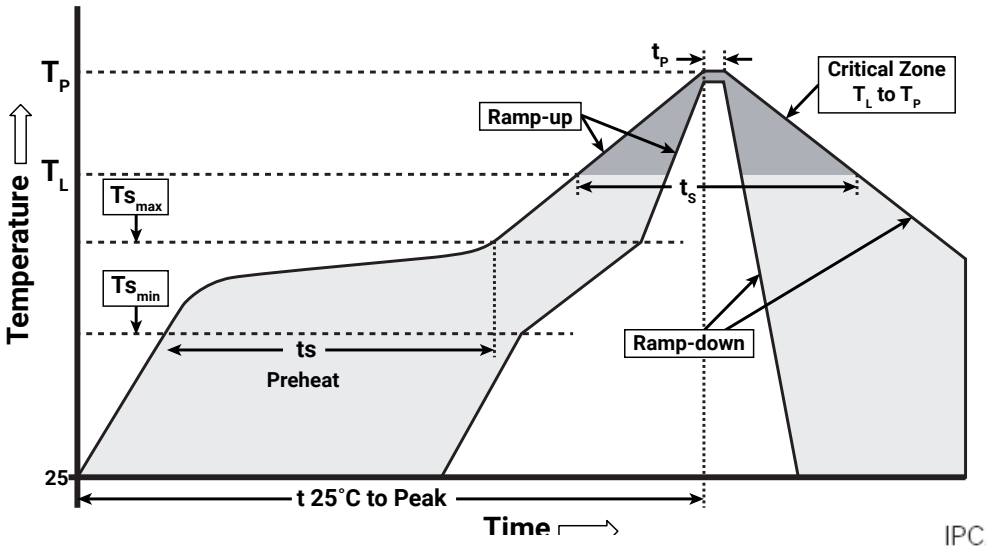

IPC/JEDEC J-STD-020C

Profile Feature	Lead-Free Solder
Average Ramp-Up Rate (Ts_{max} to T_p)	1.2 °C/second
Preheat: Temperature Min (Ts_{min})	120 °C
Preheat: Temperature Max (Ts_{max})	170 °C
Preheat: Time (ts_{min} to ts_{max})	65-150 seconds
Time Maintained Above: Temperature (T_L)	217 °C
Time Maintained Above: Time (t_L)	45-90 seconds
Peak/Classification Temperature (Tp)	235 - 245 °C
Time Within 5 °C of Actual Peak Temperature (tp)	20-40 seconds
Ramp-Down Rate	1 - 6 °C/second
Time 25 °C to Peak Temperature	4 minutes max.

Note: All temperatures refer to the topside of the package, measured on the package body surface.

© 2010-2021 Cree LED. The information in this document is subject to change without notice. Cree® and the Cree logo are registered trademarks, and the Cree LED logo is a trademark, of Wolfspeed, Inc. XLamp® is a registered trademark of Cree LED. UL® and the UL logo are registered trademarks of UL LLC.

NOTES

Measurements

The luminous flux, radiant power, chromaticity, forward voltage and CRI measurements in this document are binning specifications only and solely represent product measurements as of the date of shipment. These measurements will change over time based on a number of factors that are not within Cree LED's control and are not intended or provided as operational specifications for the products. Calculated values are provided for informational purposes only and are not intended or provided as specifications.

Pre-Release Qualification Testing

Please read the LED Reliability Overview for details of the qualification process Cree LED applies to ensure long-term reliability for XLamp LEDs and details of Cree LED's pre-release qualification testing for XLamp LEDs.

Lumen Maintenance

Cree LED now uses standardized IES LM-80-08 and TM-21-11 methods for collecting long-term data and extrapolating LED lumen maintenance. For information on the specific LM-80 data sets available for this LED, refer to the public LM-80 results document.

Please read the Long-Term Lumen Maintenance application note for more details on Cree LED's lumen maintenance testing and forecasting. Please read the Thermal Management application note for details on how thermal design, ambient temperature, and drive current affect the LED junction temperature.

Moisture Sensitivity

Cree LED recommends keeping XLamp MX-3 LEDs in the provided, resealable moisture-barrier packaging (MBP) until immediately prior to soldering. Unopened MBPs that contain XLamp LEDs do not need special storage for moisture sensitivity.

Once the MBP is opened, XLamp MX-3 LEDs should be handled and stored as MSL 2a per JEDEC J-STD-033, meaning they have limited exposure time before damage to the LED may occur during the soldering operation. The table on the right specifies the maximum exposure time in days depending on temperature and humidity conditions. LEDs with exposure time longer than the specified maximums must be baked according to the baking conditions listed below.

Temp.	Maximum Percent Relative Humidity						
	30%	40%	50%	60%	70%	80%	90%
35 °C	-	-	-	17	1	.5	.5
30 °C	-	-	-	28	1	1	1
25 °C	-	-	-	-	2	1	1
20 °C	-	-	-	-	2	1	1

Baking Conditions

It is not necessary to bake all XLamp MX-3 LEDs. Only the LEDs that meet all of the following criteria must be baked:

1. LEDs that have been removed from the original MBP.
2. LEDs that have been exposed to a humid environment longer than listed in the Moisture Sensitivity section above.
3. LEDs that have not been soldered.

LEDs should be baked at 70 °C for 24 hours. LEDs may be baked on the original reels. Remove LEDs from the MBP before baking. Do not bake parts at temperatures higher than 70 °C. This baking operation resets the exposure time as defined in the Moisture Sensitivity section above.

© 2010-2021 Cree LED. The information in this document is subject to change without notice. Cree® and the Cree logo are registered trademarks, and the Cree LED logo is a trademark, of Wolfspeed, Inc. XLamp® is a registered trademark of Cree LED. UL® and the UL logo are registered trademarks of UL LLC.

NOTES - CONTINUED

Storage Conditions

XLamp MX-3 LEDs that have been removed from the original MBP but not soldered should be stored in one of the following ways:

- Store the parts in a rigid metal container with a tight-fitting lid. Verify that the storage temperature is <30 °C, and place fresh desiccant and an RH indicator in the container to verify that the RH is no greater than 60%.
- Store the parts in a dry, nitrogen-purged cabinet or container that actively maintains the temperature at <30° and the RH at no greater than 60%.
- For short-term store only: LEDs can be resealed in the original MBP soon after opening. Fresh desiccant may be needed. Use the included humidity indicator card to verify <60% RH.

If an environment of <60% RH is not available for storage, XLamp MX-3 LEDs should be baked (described above) before reflow soldering.

RoHS Compliance

The levels of RoHS restricted materials in this product are below the maximum concentration values (also referred to as the threshold limits) permitted for such substances, or are used in an exempted application, in accordance with EU Directive 2011/65/EC (RoHS2), as implemented January 2, 2013. RoHS Declarations for this product can be obtained from your Cree LED representative or from the Product Ecology section of the Cree LED website.

REACh Compliance

REACh substances of very high concern (SVHCs) information is available for this product. Since the European Chemical Agency (ECHA) has published notice of their intent to frequently revise the SVHC listing for the foreseeable future, please contact a Cree LED representative to insure you get the most up-to-date REACh SVHC Declaration. REACh banned substance information (REACh Article 67) is also available upon request.

UL® Recognized Component

This product meets the requirements to be considered a UL Recognized Component with Level 4 enclosure consideration. The LED package or a portion thereof has been investigated as a fire and electrical enclosure per ANSI/UL 8750.

Vision Advisory

WARNING: Do not look at an exposed lamp in operation. Eye injury can result. For more information about LEDs and eye safety, please refer to the LED Eye Safety application note.

© 2010-2021 Cree LED. The information in this document is subject to change without notice. Cree® and the Cree logo are registered trademarks, and the Cree LED logo is a trademark, of Wolfspeed, Inc. XLamp® is a registered trademark of Cree LED. UL® and the UL logo are registered trademarks of UL LLC.

MECHANICAL DIMENSIONS

All measurements are ±.13 mm unless otherwise indicated.

Top View

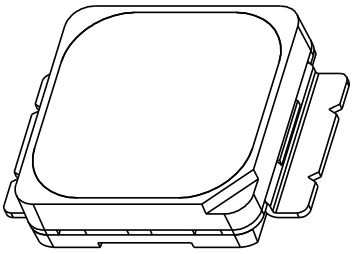

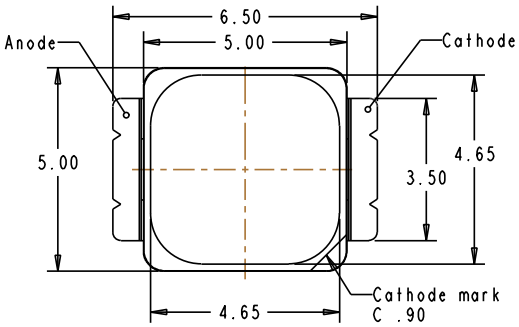

Top View

Bottom View

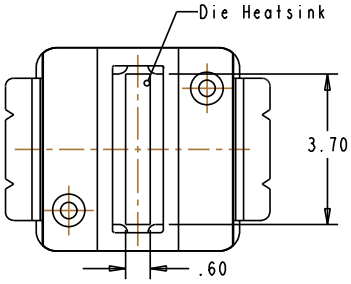

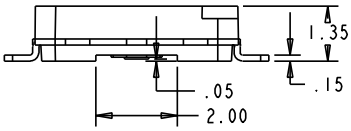

Side View

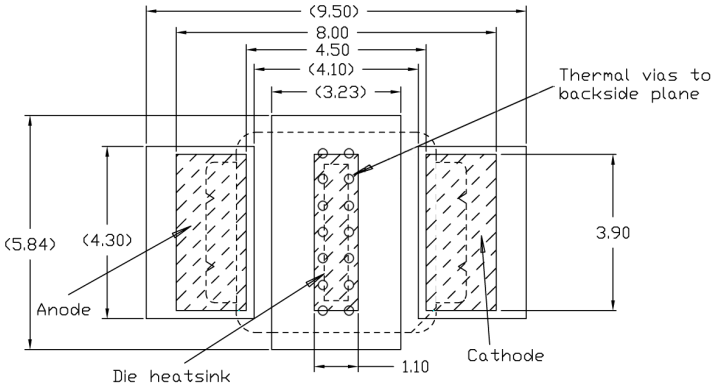

Recommended FR4 Solder Pad

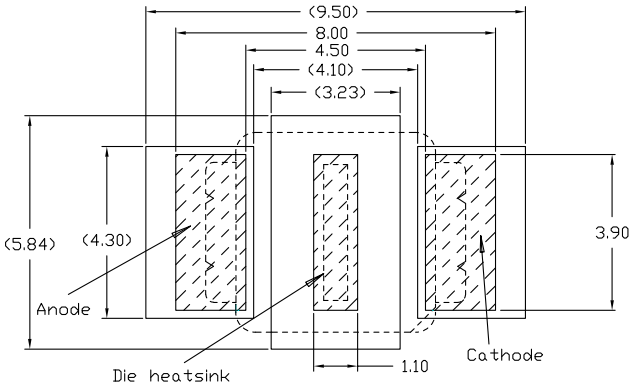

Recommended MCPCB Solder Pad

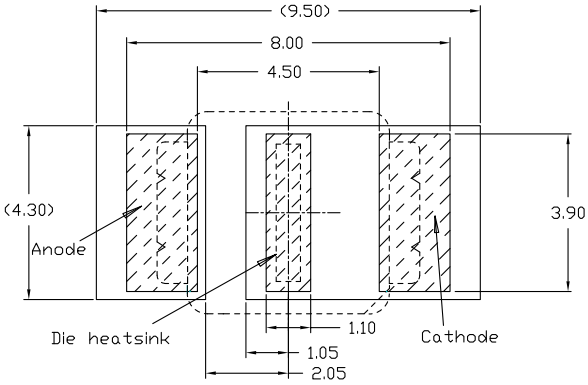

Alternative Solder Pad

© 2010-2021 Cree LED. The information in this document is subject to change without notice. Cree® and the Cree logo are registered trademarks, and the Cree LED logo is a trademark, of Wolfspeed, Inc. XLamp® is a registered trademark of Cree LED. UL® and the UL logo are registered trademarks of UL LLC.

TAPE AND REEL

All Cree LED carrier tapes conform to EIA-481D, Automated Component Handling Systems Standard.

Except as noted, all dimensions in mm.

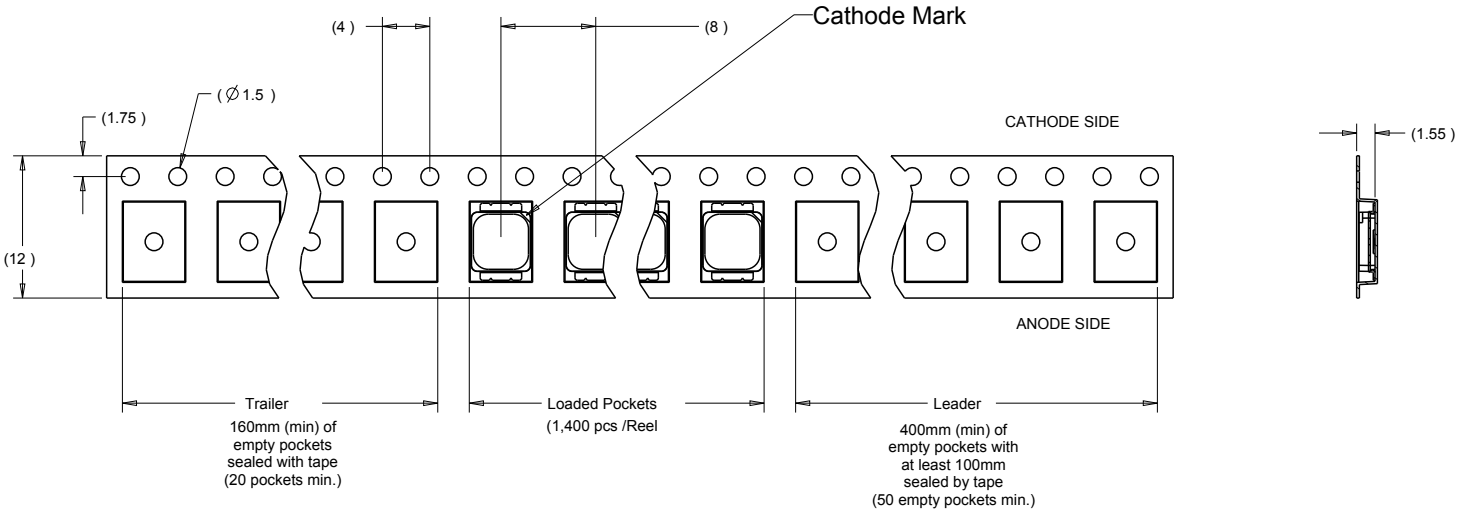

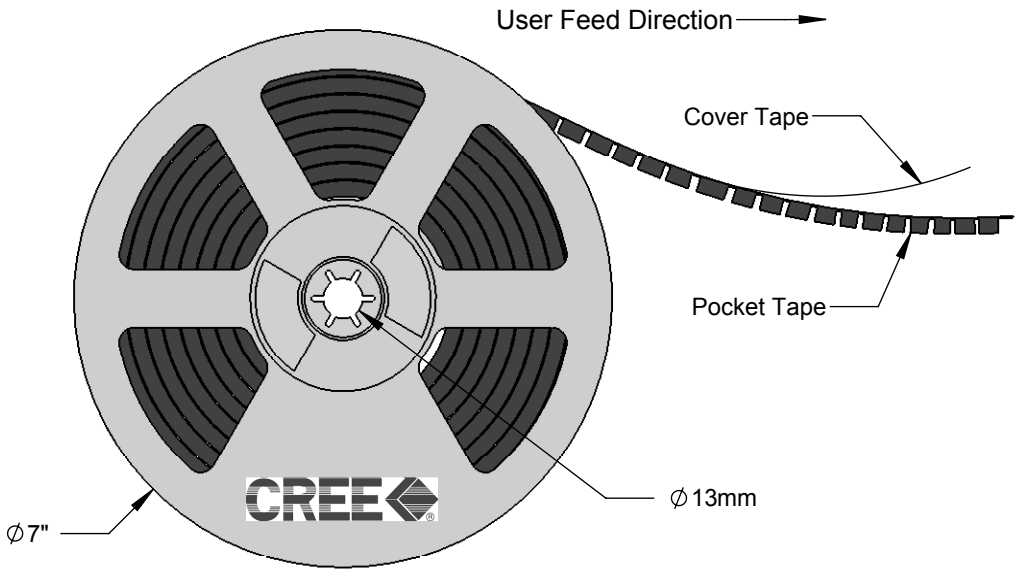

© 2010-2021 Cree LED. The information in this document is subject to change without notice. Cree® and the Cree logo are registered trademarks, and the Cree LED logo is a trademark, of Wolfspeed, Inc. XLamp® is a registered trademark of Cree LED. UL® and the UL logo are registered trademarks of UL LLC.

PACKAGING

Unpackaged Reel

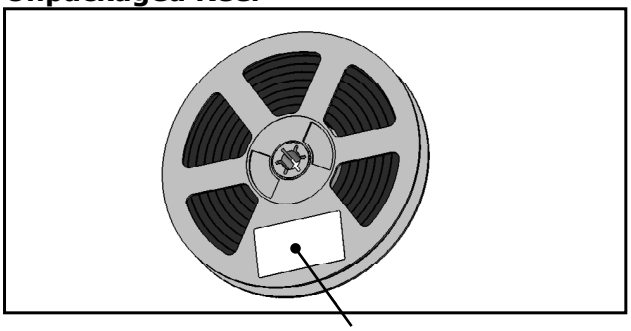

Label with Cree Bin Code, Quantity, Reel ID

Packaged Reel

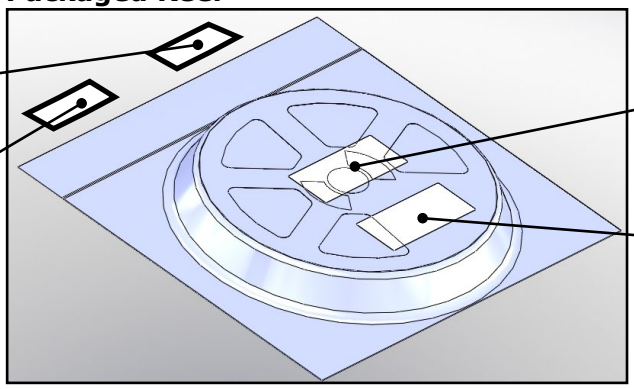

Dessicant (inside bag)

Humidity Indicator Card (inside bag)

Label with Cree Order Code, Quantity, Reel ID, PO #

Label with Cree Bin Code, Quantity, Reel ID

Boxed Reel

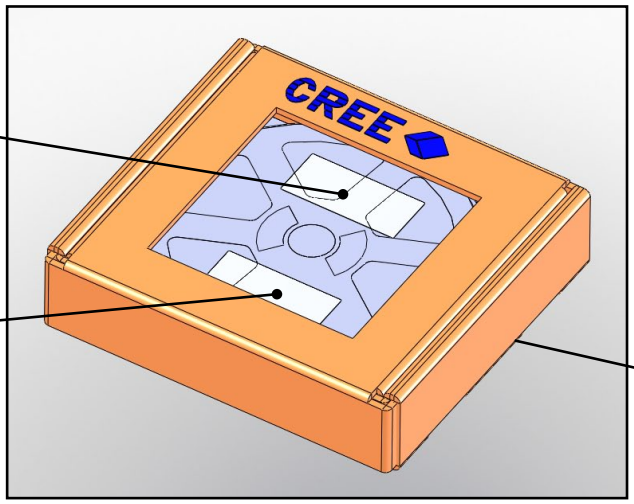

Label with Cree Order Code, Quantity, Reel ID, PO #

Label with Cree Bin Code, Quantity, Reel ID

Patent Label (on bottom of box)

© 2010-2021 Cree LED. The information in this document is subject to change without notice. Cree® and the Cree logo are registered trademarks, and the Cree LED logo is a trademark, of Wolfspeed, Inc. XLamp® is a registered trademark of Cree LED. UL® and the UL logo are registered trademarks of UL LLC.