XLamp® XP-L2 LEDs

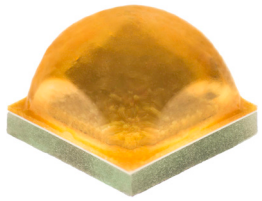

PRODUCT DESCRIPTION

The XLamp® XP-L2 LED is Cree LED's highest performing high-density discrete LED. Leveraging key elements of Cree LED's SC5 Technology® Platform, the high-power XP-L2 LED improves the lumen density, voltage characteristics and reliability of the XP-L LED in the same 3.45 mm x 3.45 mm package. This best-in-class performance enables lighting manufacturers to deliver differentiated solutions at lower system costs for applications such as roadway, outdoor area, spot and high-bay lighting.

FEATURES

- Available in white, 70-CRI white, 80-CRI white and 90-CRI white
- Broadcast color option at 5700 K provides maximum performance for TV events that require extremely high TLCI
- ANSI-compatible chromaticity bins
- Binned at 85 °C
- Maximum drive current: 3000 mA
- Low thermal resistance: 2.2 °C/W
- Wide viewing angle: 125°
- Unlimited floor life at ≤ 30 ºC/85% RH
- Reflow solderable - JEDEC J-STD-020C
- Electrically neutral thermal path
- RoHS and REACh compliant
- UL® recognized component (E349212)

TABLE OF CONTENTS

Characteristics 2
Flux Characteristics - EasyWhite® Order Codes and Bins 3
Flux Characteristics - ANSI Order Codes and Bins 6
Flux Characteristics - Broadcast Order Codes and Bins 10
Relative Spectral Power Distribution 11
Relative Flux vs. Junction Temperature..... 11
Electrical Characteristics..... 12
Relative Flux vs. Current 12
Relative Chromaticity vs. Current..... 13
Relative Chromaticity vs. Temperature..... 13
Typical Spatial Distribution..... 14
Thermal Design 14
Performance Groups - Luminous Flux..... 15
Performance Groups - Chromaticity 16
EasyWhite® Kits Plotted on ANSI Standard Chromaticity Regions 18
ANSI Kits Plotted on ANSI Standard Chromaticity Regions 19
Standard Chromaticity Kits 21
Bin and Order Code Formats..... 21
Reflow Soldering Characteristics..... 22
Notes 23
Mechanical Dimensions 25
Tape and Reel..... 26
Packaging..... 27

Cree LED / 4400 Silicon Drive / Durham, NC 27703 USA / +1.919.313.5330 / www.cree-led.com

© 2016-2021 Cree LED. The information in this document is subject to change without notice. Cree® and the Cree logo are registered trademarks, and the Cree LED logo is a trademark, of Cree, Inc. XLamp®, EasyWhite® and SC5 Technology® are registered trademarks of Cree LED. UL® and the UL logo are registered trademarks of UL LLC. Other trademarks, product, and company names are the property of their respective owners and do not imply specific product and/or vendor endorsement, sponsorship or association.

CHARACTERISTICS

Characteristics	Unit	Minimum	Typical	Maximum
Thermal resistance, junction to solder point	°C/W		2.2	
Viewing angle (FWHM)	degrees		125	
Temperature coefficient of voltage	mV/°C		-1.3	
ESD withstand voltage (HBM per Mil-Std-883D)	V			8000
DC forward current	mA			3000
Reverse voltage	V			1
Forward voltage (@ 1050 mA, 85 °C)	V		2.79	3.10
LED junction temperature	°C			150

© 2016-2021 Cree LED. The information in this document is subject to change without notice. Cree® and the Cree logo are registered trademarks, and the Cree LED logo is a trademark, of Cree, Inc. XLamp®, EasyWhite® and SC5 Technology® are registered trademarks of Cree LED. UL® and the UL logo are registered trademarks of UL LLC. Other trademarks, product, and company names are the property of their respective owners and do not imply specific product and/or vendor endorsement, sponsorship or association.

FLUX CHARACTERISTICS - EASYWHITE® ORDER CODES AND BINS (T_J = 85 °C)

The following table provides order codes for XLamp XP-L2 LEDs. For a complete description of the order code nomenclature, please see the Bin and Order Code Formats section (page 21). For definitions of the chromaticity kits, please see the Standard Chromaticity Kits section (page 21).

Nominal CCT	CRI		Minimum Luminous Flux @1050 mA			2-Step		3-Step		5-Step	
	Min	Typ	Flux Bin	Flux (lm) @ 85 °C	Flux (lm) @ 25 °C*	Group	Order Code	Group	Order Code	Group	Order Code
5000 K	70		W2	500	549					50E	XPLBWT-00-0000-000BW250E
			V6	480	527						XPLBWT-00-0000-000BV650E
	80		V4	440	483			50G	XPLBWT-00-0000-000HV450G		
			V3	420	461				XPLBWT-00-0000-000HV350G		
	90		V3	420	461			50G	XPLBWT-00-0000-000UV350G		
			V2	400	439				XPLBWT-00-0000-000UV250G		
			U6	380	417				XPLBWT-00-0000-000UU650G		
4500 K	70		W2	500	549					45E	XPLBWT-00-0000-000BW245E
			V6	480	527						XPLBWT-00-0000-000BV645E
			V5	460	505						XPLBWT-00-0000-000BV545E
	80		V4	440	483			45G	XPLBWT-00-0000-000HV445G		
			V3	420	461				XPLBWT-00-0000-000HV345G		
	90		V2	400	439			45G	XPLBWT-00-0000-000UV245G		
			U6	380	417				XPLBWT-00-0000-000UU645G		
			U5	360	395				XPLBWT-00-0000-000UU545G		

Notes

- Cree LED maintains a tolerance of ±7% on flux and power measurements, ±0.005 on chromaticity (CCx, CCy) measurements and a tolerance of ±2 on CRI measurements. See the Measurements section (page 23).
- XLamp XP-L2 LED order codes specify only a minimum flux bin and not a maximum. Cree LED may ship reels in flux bins higher than the minimum specified by the order code without advance notice. Shipments will always adhere to the chromaticity bin restrictions specified by the order code.

* Flux values @ 25 °C are calculated and for reference only.

© 2016-2021 Cree LED. The information in this document is subject to change without notice. Cree® and the Cree logo are registered trademarks, and the Cree LED logo is a trademark, of Cree, Inc. XLamp®, EasyWhite® and SC5 Technology® are registered trademarks of Cree LED. UL® and the UL logo are registered trademarks of UL LLC. Other trademarks, product, and company names are the property of their respective owners and do not imply specific product and/or vendor endorsement, sponsorship or association.

FLUX CHARACTERISTICS - EASYWHITE® ORDER CODES AND BINS (T_J = 85 °C) - CONTINUED

Nominal CCT	CRI		Minimum Luminous Flux @1050 mA			2-Step		3-Step		5-Step	
	Min	Typ	Flux Bin	Flux (lm) @ 85 °C	Flux (lm) @ 25 °C*	Group	Order Code	Group	Order Code	Group	Order Code
4000 K	70		W2	500	549					40E	XPLBWT-00-0000-000BW240E
			V6	480	527						XPLBWT-00-0000-000BV640E
			V5	460	505						XPLBWT-00-0000-000BV540E
	80		V4	440	483			40G	XPLBWT-00-0000-000HV440G		
			V3	420	461				XPLBWT-00-0000-000HV340G		
			V2	400	439				XPLBWT-00-0000-000HV240G		
	90		V2	400	439	40H	XPLBWT-00-0000-000UV240H	40G	XPLBWT-00-0000-000UV240G		
			U6	380	417		XPLBWT-00-0000-000UU640H		XPLBWT-00-0000-000UU640G		
			U5	360	395		XPLBWT-00-0000-000UU540H		XPLBWT-00-0000-000UU540G		
3500 K	70		V5	460	505					35E	XPLBWT-00-0000-000BV535E
			V4	440	483						XPLBWT-00-0000-000BV435E
			V3	420	461						XPLBWT-00-0000-000BV335E
	80		V3	420	461			35G	XPLBWT-00-0000-000HV335G		
			V2	400	439				XPLBWT-00-0000-000HV235G		
			U6	380	417				XPLBWT-00-0000-000HU635G		
	90		U5	360	395	35H	XPLBWT-00-0000-000UU535H	35G	XPLBWT-00-0000-000UU535G		
			U4	340	373		XPLBWT-00-0000-000UU435H		XPLBWT-00-0000-000UU435G		
			U3	320	351		XPLBWT-00-0000-000UU335H		XPLBWT-00-0000-000UU335G		

Notes

- Cree LED maintains a tolerance of ±7% on flux and power measurements, ±0.005 on chromaticity (CCx, CCy) measurements and a tolerance of ±2 on CRI measurements. See the Measurements section (page 23).
- XLamp XP-L2 LED order codes specify only a minimum flux bin and not a maximum. Cree LED may ship reels in flux bins higher than the minimum specified by the order code without advance notice. Shipments will always adhere to the chromaticity bin restrictions specified by the order code.

* Flux values @ 25 °C are calculated and for reference only.

© 2016-2021 Cree LED. The information in this document is subject to change without notice. Cree® and the Cree logo are registered trademarks, and the Cree LED logo is a trademark, of Cree, Inc. XLamp®, EasyWhite® and SC5 Technology® are registered trademarks of Cree LED. UL® and the UL logo are registered trademarks of UL LLC. Other trademarks, product, and company names are the property of their respective owners and do not imply specific product and/or vendor endorsement, sponsorship or association.

FLUX CHARACTERISTICS - EASYWHITE® ORDER CODES AND BINS (T_J = 85 °C) - CONTINUED

Nominal CCT	CRI		Minimum Luminous Flux @1050 mA			2-Step		3-Step		5-Step	
	Min	Typ	Flux Bin	Flux (lm) @ 85 °C	Flux (lm) @ 25 °C*	Group	Order Code	Group	Order Code	Group	Order Code
3000 K	70		V4	440	483					30E	XPLBWT-00-0000-000BV430E
			V3	420	461						XPLBWT-00-0000-000BV330E
	80		V2	400	439			30G	XPLBWT-00-0000-000HV230G		
			U6	380	417				XPLBWT-00-0000-000HU630G		
	90		U4	340	373	30H	XPLBWT-00-0000-000UU430H	30G	XPLBWT-00-0000-000UU430G		
			U3	320	351		XPLBWT-00-0000-000UU330H		XPLBWT-00-0000-000UU330G		
			U2	300	329		XPLBWT-00-0000-000UU230H		XPLBWT-00-0000-000UU230G		
2700 K	80		V2	400	439			27G	XPLBWT-00-0000-000HV227G		
			U6	380	417				XPLBWT-00-0000-000HU627G		
			U5	360	395				XPLBWT-00-0000-000HU527G		
	90		U3	320	351	27H	XPLBWT-00-0000-000UU327H	27G	XPLBWT-00-0000-000UU327G		
			U2	300	329		XPLBWT-00-0000-000UU227H		XPLBWT-00-0000-000UU227G		
			T6	280	307		XPLBWT-00-0000-000UT627H		XPLBWT-00-0000-000UT627G		

Notes

- Cree LED maintains a tolerance of ±7% on flux and power measurements, ±0.005 on chromaticity (CCx, CCy) measurements and a tolerance of ±2 on CRI measurements. See the Measurements section (page 23).
- XLamp XP-L2 LED order codes specify only a minimum flux bin and not a maximum. Cree LED may ship reels in flux bins higher than the minimum specified by the order code without advance notice. Shipments will always adhere to the chromaticity bin restrictions specified by the order code.

* Flux values @ 25 °C are calculated and for reference only.

© 2016-2021 Cree LED. The information in this document is subject to change without notice. Cree® and the Cree logo are registered trademarks, and the Cree LED logo is a trademark, of Cree, Inc. XLamp®, EasyWhite® and SC5 Technology® are registered trademarks of Cree LED. UL® and the UL logo are registered trademarks of UL LLC. Other trademarks, product, and company names are the property of their respective owners and do not imply specific product and/or vendor endorsement, sponsorship or association.

FLUX CHARACTERISTICS - ANSI ORDER CODES AND BINS (T_J = 85 °C)

The following table provides order codes for XLamp XP-L2 LEDs. For a complete description of the order code nomenclature, please see the Bin and Order Code Formats section (page 21). For definitions of the chromaticity kits, please see the Standard Chromaticity Kits section (page 21).

Chromaticity		Minimum Luminous Flux (lm) @ 1050 mA			Order Codes			
Kit	CCT	Flux Bin	Flux (lm) @ 85 °C	Flux (lm) @ 25 °C*	No Minimum CRI	70 CRI Minimum	80 CRI Minimum	90 CRI Minimum
DT	7000 K	V5	460	505	XPLBWT-00-0000-0000V50DT	XPLBWT-00-0000-000BV50DT		
		V4	440	483	XPLBWT-00-0000-0000V40DT	XPLBWT-00-0000-000BV40DT		
		V3	420	461			XPLBWT-00-0000-000HV30DT	
		V2	400	439			XPLBWT-00-0000-000HV20DT	
CB	6500 K	V5	460	505	XPLBWT-00-0000-0000V50CB	XPLBWT-00-0000-000BV50CB		
		V4	440	483	XPLBWT-00-0000-0000V40CB	XPLBWT-00-0000-000BV40CB		
		V3	420	461			XPLBWT-00-0000-000HV30CB	
		V2	400	439			XPLBWT-00-0000-000HV20CB	
		U6	380	417				XPLBWT-00-0000-000UU60CB
		U5	360	395				XPLBWT-00-0000-000UU50CB
E1	6500 K	V6	480	527	XPLBWT-00-0000-0000V60E1			
		V5	460	505	XPLBWT-00-0000-0000V50E1	XPLBWT-00-0000-000BV50E1		
		V4	440	483	XPLBWT-00-0000-0000V40E1	XPLBWT-00-0000-000BV40E1		
		V3	420	461			XPLBWT-00-0000-000HV30E1	
		V2	400	439			XPLBWT-00-0000-000HV20E1	

Notes

- Cree LED maintains a tolerance of ±7% on flux and power measurements, ±0.005 on chromaticity (CCx, CCy) measurements and a tolerance of ±2 on CRI measurements. See the Measurements section (page 23).
- XLamp XP-L2 LED order codes specify only a minimum flux bin and not a maximum. Cree LED may ship reels in flux bins higher than the minimum specified by the order code without advance notice. Shipments will always adhere to the chromaticity bin restrictions specified by the order code.

* Flux values @ 25 °C are calculated and for reference only.

© 2016-2021 Cree LED. The information in this document is subject to change without notice. Cree® and the Cree logo are registered trademarks, and the Cree LED logo is a trademark, of Cree, Inc. XLamp®, EasyWhite® and SC5 Technology® are registered trademarks of Cree LED. UL® and the UL logo are registered trademarks of UL LLC. Other trademarks, product, and company names are the property of their respective owners and do not imply specific product and/or vendor endorsement, sponsorship or association.

FLUX CHARACTERISTICS - ANSI ORDER CODES AND BINS (T_J = 85 °C) - CONTINUED

Chromaticity		Minimum Luminous Flux (lm) @ 1050 mA			Order Codes			
Kit	CCT	Flux Bin	Flux (lm) @ 85 °C	Flux (lm) @ 25 °C*	No Minimum CRI	70 CRI Minimum	80 CRI Minimum	90 CRI Minimum
DV	5700 K	V6	480	527	XPLBWT-00-0000-0000V60DV	XPLBWT-00-0000-000BV60DV		
		V5	460	505	XPLBWT-00-0000-0000V50DV	XPLBWT-00-0000-000BV50DV		
		V4	440	483	XPLBWT-00-0000-0000V40DV	XPLBWT-00-0000-000BV40DV	XPLBWT-00-0000-000HV40DV	
		V3	420	461			XPLBWT-00-0000-000HV30DV	
		V2	400	439			XPLBWT-00-0000-000HV20DV	
		U6	380	417				XPLBWT-00-0000-000UU60DV
		U5	360	395				XPLBWT-00-0000-000UU50DV
E2	5700 K	W2	500	549	XPLBWT-00-0000-0000W20E2	XPLBWT-00-0000-000BW20E2		
		V6	480	527	XPLBWT-00-0000-0000V60E2	XPLBWT-00-0000-000BV60E2		
		V5	460	505	XPLBWT-00-0000-0000V50E2	XPLBWT-00-0000-000BV50E2		
		V4	440	483			XPLBWT-00-0000-000HV40E2	
		V3	420	461			XPLBWT-00-0000-000HV30E2	XPLBWT-00-0000-000UV30E2
		V2	400	439				XPLBWT-00-0000-000UV20E2
		U6	380	417				XPLBWT-00-0000-000UU60E2

Notes

- Cree LED maintains a tolerance of ±7% on flux and power measurements, ±0.005 on chromaticity (CCx, CCy) measurements and a tolerance of ±2 on CRI measurements. See the Measurements section (page 23).
- XLamp XP-L2 LED order codes specify only a minimum flux bin and not a maximum. Cree LED may ship reels in flux bins higher than the minimum specified by the order code without advance notice. Shipments will always adhere to the chromaticity bin restrictions specified by the order code.

* Flux values @ 25 °C are calculated and for reference only.

© 2016-2021 Cree LED. The information in this document is subject to change without notice. Cree® and the Cree logo are registered trademarks, and the Cree LED logo is a trademark, of Cree, Inc. XLamp®, EasyWhite® and SC5 Technology® are registered trademarks of Cree LED. UL® and the UL logo are registered trademarks of UL LLC. Other trademarks, product, and company names are the property of their respective owners and do not imply specific product and/or vendor endorsement, sponsorship or association.

FLUX CHARACTERISTICS - ANSI ORDER CODES AND BINS (T_J = 85 °C) - CONTINUED

Chromaticity		Minimum Luminous Flux (lm) @ 1050 mA			Order Codes		
Kit	CCT	Flux Bin	Flux (lm) @ 85 °C	Flux (lm) @ 25 °C*	70 CRI Minimum	80 CRI Minimum	90 CRI Minimum
E3	5000 K	W2	500	549	XPLBWT-00-0000-000BW20E3		
		V6	480	527	XPLBWT-00-0000-000BV60E3		
		V5	460	505	XPLBWT-00-0000-000BV50E3		
		V4	440	483		XPLBWT-00-0000-000HV40E3	
		V3	420	461		XPLBWT-00-0000-000HV30E3	XPLBWT-00-0000-000UV30E3
		V2	400	439			XPLBWT-00-0000-000UV20E3
		U6	380	417			XPLBWT-00-0000-000UU60E3
E4	4500 K	W2	500	549	XPLBWT-00-0000-000BW20E4		
		V6	480	527	XPLBWT-00-0000-000BV60E4		
		V5	460	505	XPLBWT-00-0000-000BV50E4		
		V4	440	483		XPLBWT-00-0000-000HV40E4	
		V3	420	461		XPLBWT-00-0000-000HV30E4	
		V2	400	439			XPLBWT-00-0000-000UV20E4
		U6	380	417			XPLBWT-00-0000-000UU60E4
		U5	360	395			XPLBWT-00-0000-000UU50E4
E5	4000 K	W2	500	549	XPLBWT-00-0000-000BW20E5		
		V6	480	527	XPLBWT-00-0000-000BV60E5		
		V5	460	505	XPLBWT-00-0000-000BV50E5		
		V4	440	483	XPLBWT-00-0000-000BV40E5	XPLBWT-00-0000-000HV40E5	
		V3	420	461		XPLBWT-00-0000-000HV30E5	
		V2	400	439		XPLBWT-00-0000-000HV20E5	XPLBWT-00-0000-000UV20E5
		U6	380	417			XPLBWT-00-0000-000UU60E5
		U5	360	395			XPLBWT-00-0000-000UU50E5
E6	3500 K	V5	460	505	XPLBWT-00-0000-000BV50E6		
		V4	440	483	XPLBWT-00-0000-000BV40E6		
		V3	420	461	XPLBWT-00-0000-000BV30E6	XPLBWT-00-0000-000HV30E6	
		V2	400	439		XPLBWT-00-0000-000HV20E6	
		U6	380	417		XPLBWT-00-0000-000HU60E6	
		U5	360	395			XPLBWT-00-0000-000UU50E6
		U4	340	373			XPLBWT-00-0000-000UU40E6
		U3	320	351			XPLBWT-00-0000-000UU30E6

Notes

- Cree LED maintains a tolerance of ±7% on flux and power measurements, ±0.005 on chromaticity (CCx, CCy) measurements and a tolerance of ±2 on CRI measurements. See the Measurements section (page 23).
- XLamp XP-L2 LED order codes specify only a minimum flux bin and not a maximum. Cree LED may ship reels in flux bins higher than the minimum specified by the order code without advance notice. Shipments will always adhere to the chromaticity bin restrictions specified by the order code.

* Flux values @ 25 °C are calculated and for reference only.

© 2016-2021 Cree LED. The information in this document is subject to change without notice. Cree® and the Cree logo are registered trademarks, and the Cree LED logo is a trademark, of Cree, Inc. XLamp®, EasyWhite® and SC5 Technology® are registered trademarks of Cree LED. UL® and the UL logo are registered trademarks of UL LLC. Other trademarks, product, and company names are the property of their respective owners and do not imply specific product and/or vendor endorsement, sponsorship or association.

FLUX CHARACTERISTICS - ANSI ORDER CODES AND BINS (T_J = 85 °C) - CONTINUED

Chromaticity		Minimum Luminous Flux (lm) @ 1050 mA			Order Codes		
Kit	CCT	Flux Bin	Flux (lm) @ 85 °C	Flux (lm) @ 25 °C*	70 CRI Minimum	80 CRI Minimum	90 CRI Minimum
E7	3000 K	V4	440	483	XPLBWT-00-0000-000BV40E7		
		V3	420	461	XPLBWT-00-0000-000BV30E7		
		V2	400	439		XPLBWT-00-0000-000HV20E7	
		U6	380	417		XPLBWT-00-0000-000HU60E7	
		U5	360	395			
		U4	340	373			XPLBWT-00-0000-000UU40E7
		U3	320	351			XPLBWT-00-0000-000UU30E7
E8	2700 K	V2	400	439		XPLBWT-00-0000-000HV20E8	
		U6	380	417		XPLBWT-00-0000-000HU60E8	
		U5	360	395		XPLBWT-00-0000-000HU50E8	
		U4	340	373			
		U3	320	351			XPLBWT-00-0000-000UU30E8
		U2	300	329			XPLBWT-00-0000-000UU20E8
		T6	280	307			XPLBWT-00-0000-000UT60E8

Notes

- Cree LED maintains a tolerance of ±7% on flux and power measurements, ±0.005 on chromaticity (CCx, CCy) measurements and a tolerance of ±2 on CRI measurements. See the Measurements section (page 23).
- XLamp XP-L2 LED order codes specify only a minimum flux bin and not a maximum. Cree LED may ship reels in flux bins higher than the minimum specified by the order code without advance notice. Shipments will always adhere to the chromaticity bin restrictions specified by the order code.

* Flux values @ 25 °C are calculated and for reference only.

© 2016-2021 Cree LED. The information in this document is subject to change without notice. Cree® and the Cree logo are registered trademarks, and the Cree LED logo is a trademark, of Cree, Inc. XLamp®, EasyWhite® and SC5 Technology® are registered trademarks of Cree LED. UL® and the UL logo are registered trademarks of UL LLC. Other trademarks, product, and company names are the property of their respective owners and do not imply specific product and/or vendor endorsement, sponsorship or association.

FLUX CHARACTERISTICS - BROADCAST ORDER CODES AND BINS (T_J = 85 °C)

The following table provides order codes for XLamp XP-L2 Broadcast LEDs. For a complete description of the order code nomenclature, please see the Bin and Order Code Formats section (page 21). For definitions of the chromaticity kits, please see the Standard Chromaticity Kits section (page 21).

Chromaticity		Minimum Luminous Flux (lm) @ 1050 mA			Order Codes	
Kit	CCT	Flux Bin	Flux (lm) @ 85 °C	Flux (lm) @ 25 °C*	90 CRI Minimum 90 TLCI Minimum	95 CRI Minimum 95 TLCI Minimum
E2	5700 K	V3	420	461	XPLBWT-00-B001-A00UV30E2	
		U4	340	373		XPLBWT-00-B001-A00ZU40E2

Notes

- TLCI refers to the European Broadcast Union's Television Lighting Consistency Index 2012, which aids broadcasters in assessing the colorimetric quality of lighting in their production environment. Cree LED maintains a tolerance of ±2 on TLCI measurements. See the Measurements section (page 23).
- Cree LED maintains a tolerance of ±7% on flux and power measurements, ±0.005 on chromaticity (CCx, CCy) measurements and a tolerance of ±2 on CRI. See the Measurements section (page 23).
- XLamp XP-L2 LED order codes specify only a minimum flux bin and not a maximum. Cree LED may ship reels in flux bins higher than the minimum specified by the order code without advance notice. Shipments will always adhere to the chromaticity bin restrictions specified by the order code.

* Flux values @ 25 °C are calculated and for reference only.

© 2016-2021 Cree LED. The information in this document is subject to change without notice. Cree® and the Cree logo are registered trademarks, and the Cree LED logo is a trademark, of Cree, Inc. XLamp®, EasyWhite® and SC5 Technology® are registered trademarks of Cree LED. UL® and the UL logo are registered trademarks of UL LLC. Other trademarks, product, and company names are the property of their respective owners and do not imply specific product and/or vendor endorsement, sponsorship or association.

RELATIVE SPECTRAL POWER DISTRIBUTION

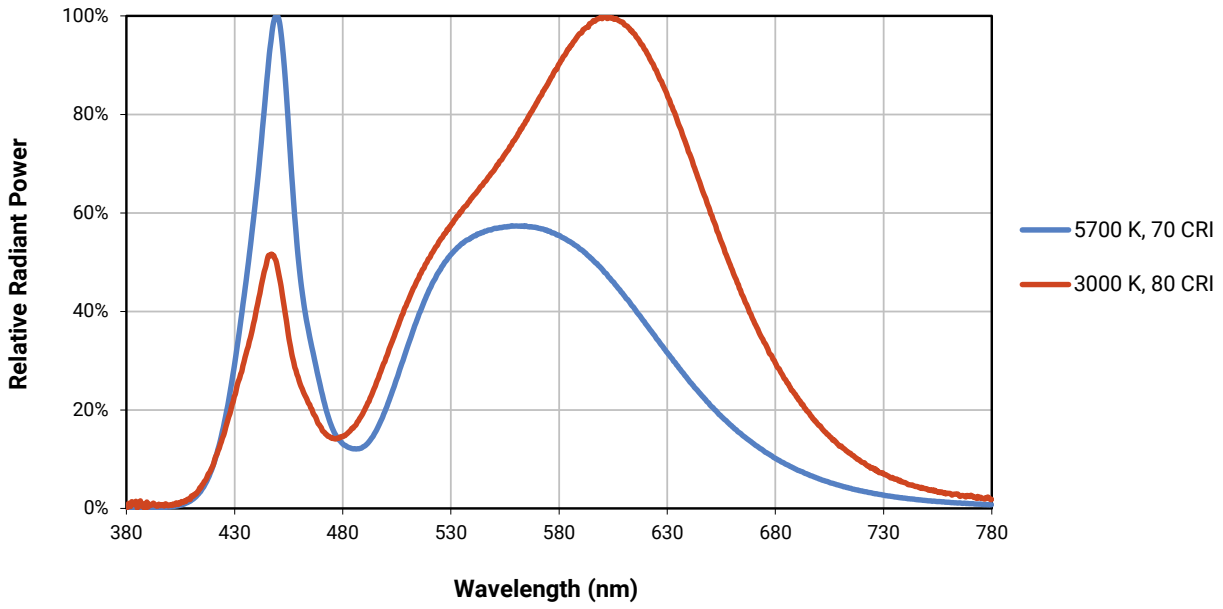

RELATIVE FLUX VS. JUNCTION TEMPERATURE (I_F = 1050 mA)

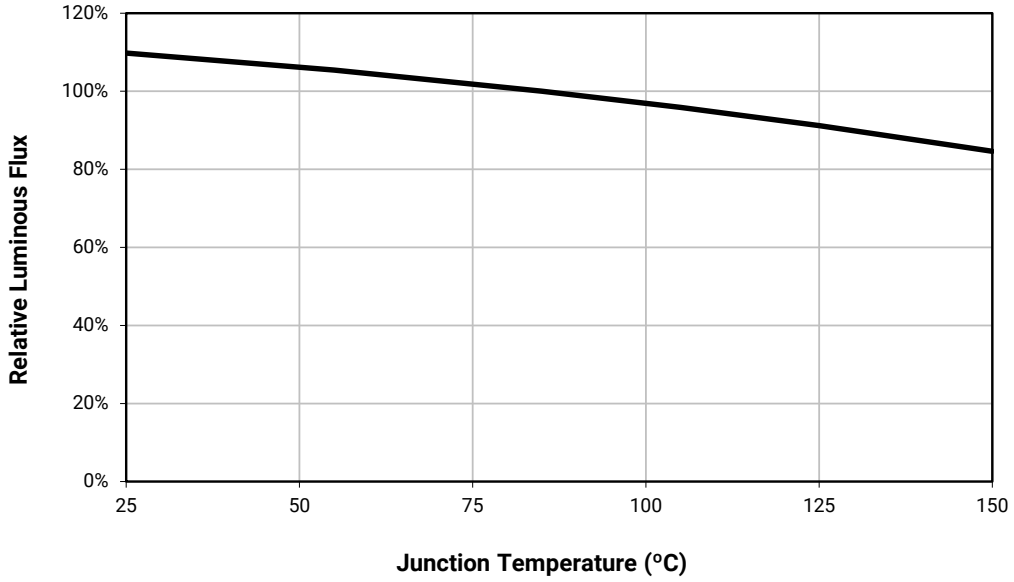

© 2016-2021 Cree LED. The information in this document is subject to change without notice. Cree® and the Cree logo are registered trademarks, and the Cree LED logo is a trademark, of Cree, Inc. XLamp®, EasyWhite® and SC5 Technology® are registered trademarks of Cree LED. UL® and the UL logo are registered trademarks of UL LLC. Other trademarks, product, and company names are the property of their respective owners and do not imply specific product and/or vendor endorsement, sponsorship or association.

ELECTRICAL CHARACTERISTICS (T_J = 85 °C)

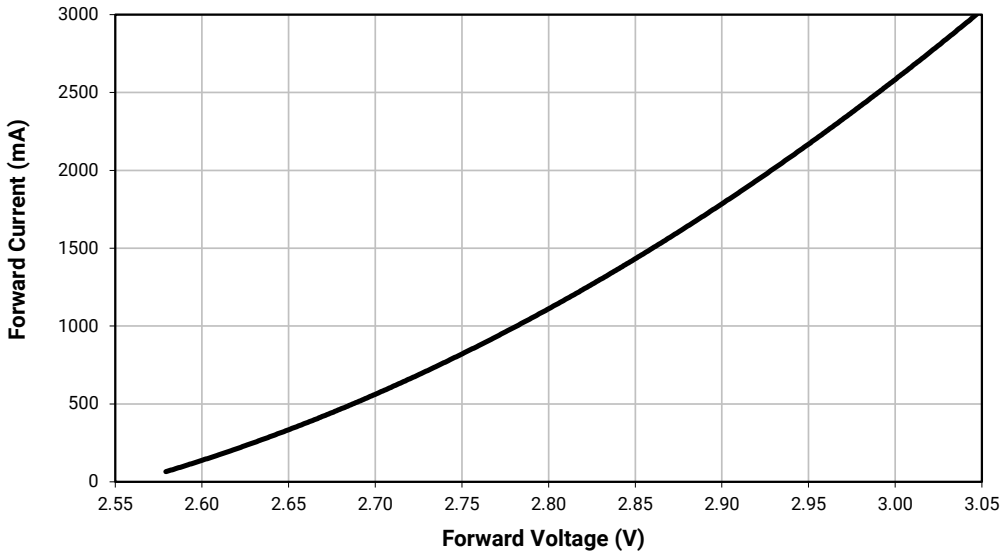

RELATIVE FLUX VS. CURRENT (T_J = 85 °C)

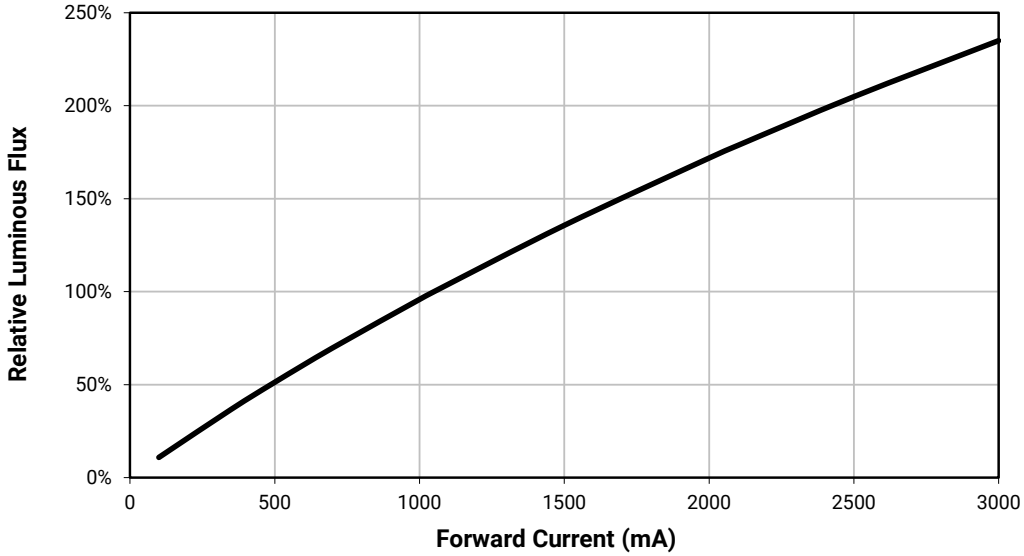

© 2016-2021 Cree LED. The information in this document is subject to change without notice. Cree® and the Cree logo are registered trademarks, and the Cree LED logo is a trademark, of Cree, Inc. XLamp®, EasyWhite® and SC5 Technology® are registered trademarks of Cree LED. UL® and the UL logo are registered trademarks of UL LLC. Other trademarks, product, and company names are the property of their respective owners and do not imply specific product and/or vendor endorsement, sponsorship or association.

RELATIVE CHROMATICITY VS. CURRENT (WARM WHITE)

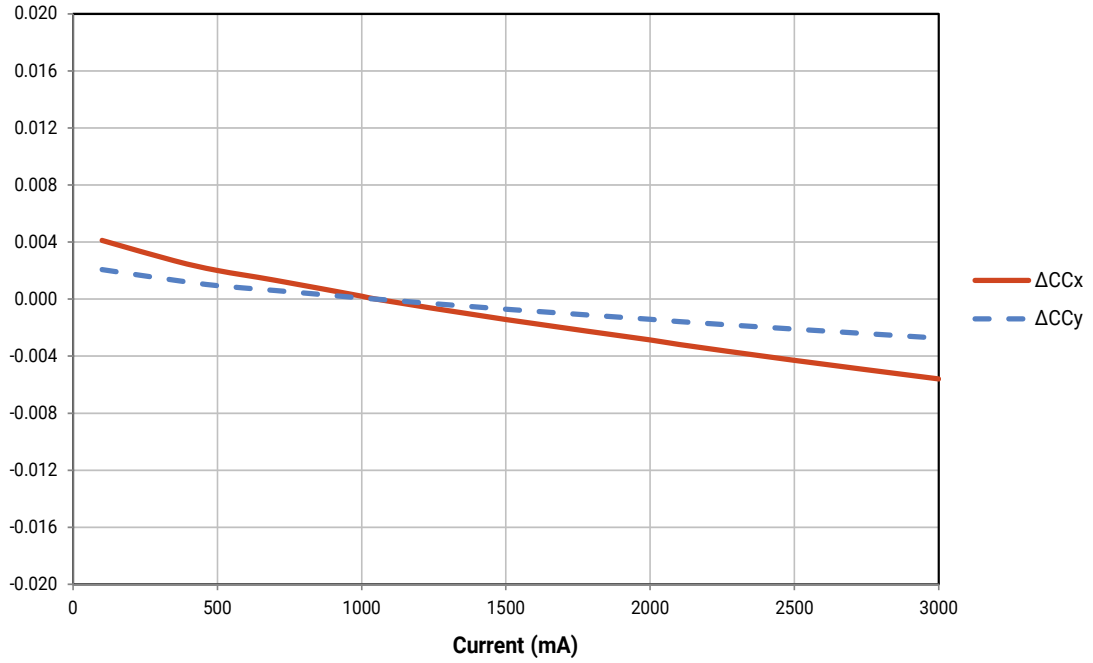

RELATIVE CHROMATICITY VS. TEMPERATURE (WARM WHITE)

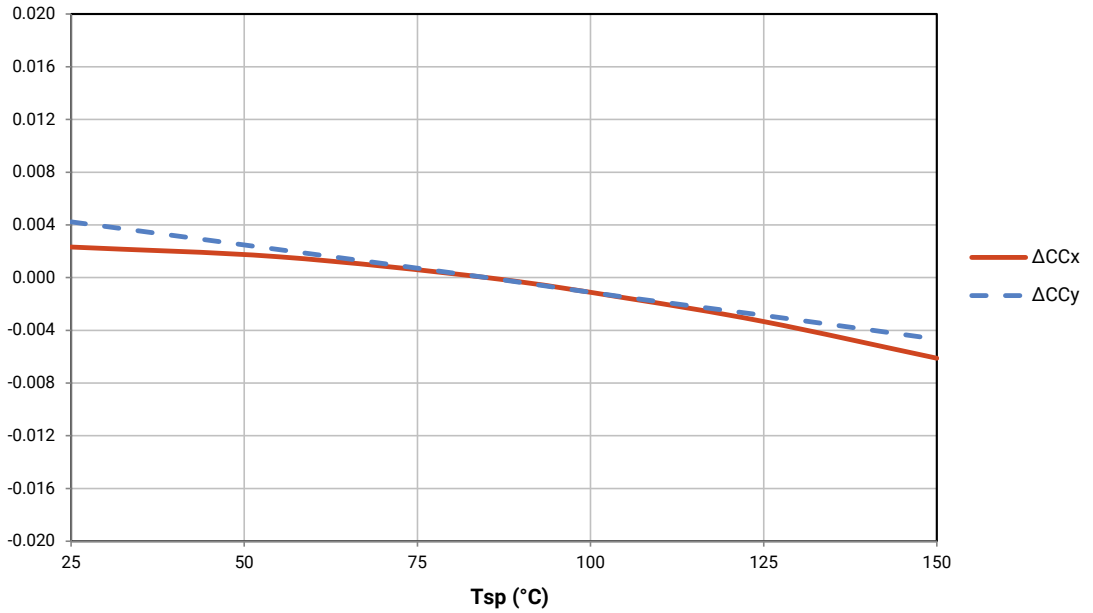

© 2016-2021 Cree LED. The information in this document is subject to change without notice. Cree® and the Cree logo are registered trademarks, and the Cree LED logo is a trademark, of Cree, Inc. XLamp®, EasyWhite® and SC5 Technology® are registered trademarks of Cree LED. UL® and the UL logo are registered trademarks of UL LLC. Other trademarks, product, and company names are the property of their respective owners and do not imply specific product and/or vendor endorsement, sponsorship or association.

TYPICAL SPATIAL DISTRIBUTION

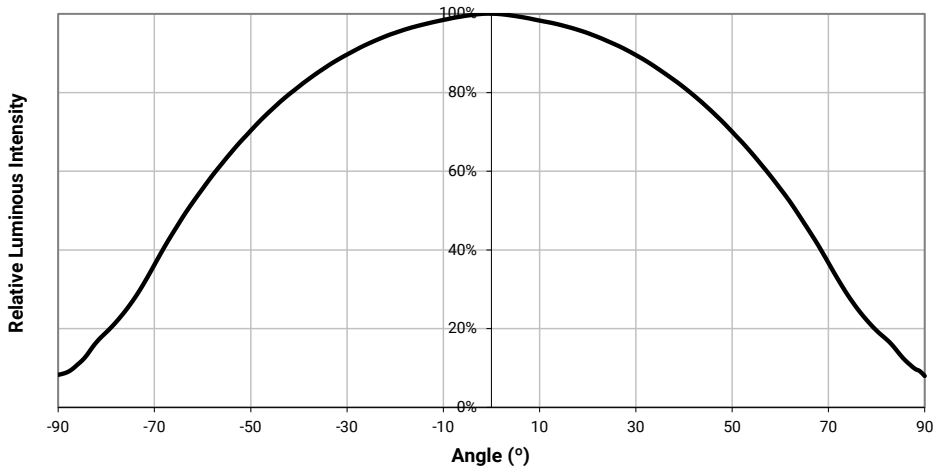

THERMAL DESIGN

The maximum forward current is determined by the thermal resistance between the LED junction and ambient. It is crucial for the end product to be designed in a manner that minimizes the thermal resistance from the solder point to ambient in order to optimize lamp life and optical characteristics.

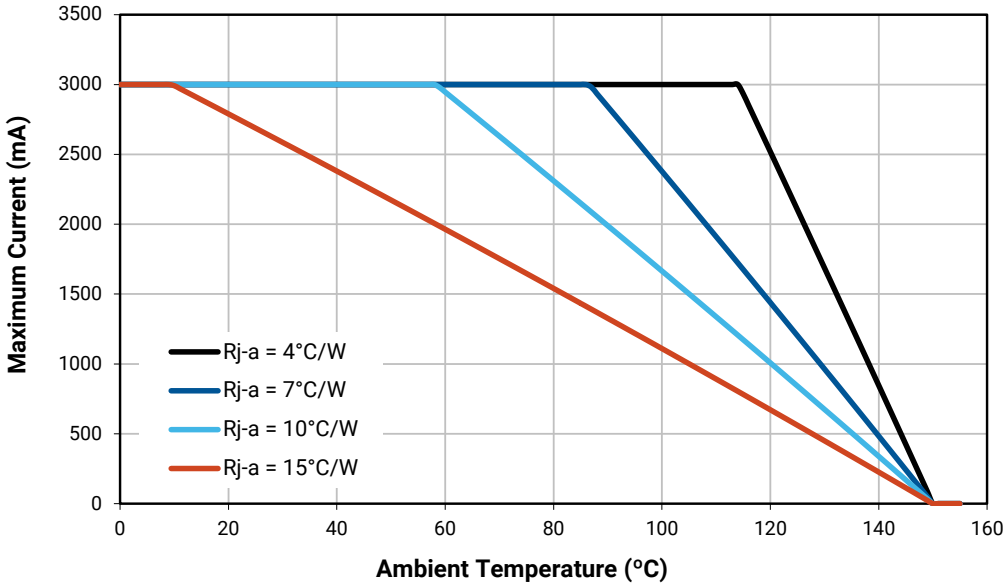

© 2016-2021 Cree LED. The information in this document is subject to change without notice. Cree® and the Cree logo are registered trademarks, and the Cree LED logo is a trademark, of Cree, Inc. XLamp®, EasyWhite® and SC5 Technology® are registered trademarks of Cree LED. UL® and the UL logo are registered trademarks of UL LLC. Other trademarks, product, and company names are the property of their respective owners and do not imply specific product and/or vendor endorsement, sponsorship or association.

PERFORMANCE GROUPS - LUMINOUS FLUX

XLamp XP-L2 LEDs are tested for luminous flux and placed into one of the following luminous-flux bins. The flux bins, with a 0 appended, are used in the Bin Code "Luminous flux group."

Luminous Flux Bin	Minimum Luminous Flux (lm) @ 1050 mA	Maximum Luminous Flux (lm) @ 1050 mA
T6	280	300
U2	300	320
U3	320	340
U4	340	360
U5	360	380
U6	380	400
V2	400	420
V3	420	440
V4	440	460
V5	460	480
V6	480	500
W2	500	520
W3	520	540

© 2016-2021 Cree LED. The information in this document is subject to change without notice. Cree® and the Cree logo are registered trademarks, and the Cree LED logo is a trademark, of Cree, Inc. XLamp®, EasyWhite® and SC5 Technology® are registered trademarks of Cree LED. UL® and the UL logo are registered trademarks of UL LLC. Other trademarks, product, and company names are the property of their respective owners and do not imply specific product and/or vendor endorsement, sponsorship or association.

PERFORMANCE GROUPS - CHROMATICITY

Region	x	y	Region	x	y	Region	x	y	Region	x	y
0A	0.2950	0.2970	0B	0.2920	0.3060	0C	0.2984	0.3133	0D	0.2984	0.3133
	0.2920	0.3060		0.2895	0.3135		0.2962	0.3220		0.3048	0.3207
	0.2984	0.3133		0.2962	0.3220		0.3028	0.3304		0.3068	0.3113
	0.3009	0.3042		0.2984	0.3133		0.3048	0.3207		0.3009	0.3042
0R	0.2980	0.2880	0S	0.2895	0.3135	0T	0.2962	0.3220	0U	0.3037	0.2937
	0.2950	0.2970		0.2870	0.3210		0.2937	0.3312		0.3009	0.3042
	0.3009	0.3042		0.2937	0.3312		0.3005	0.3415		0.3068	0.3113
	0.3037	0.2937		0.2962	0.3220		0.3028	0.3304		0.3093	0.2993
1A	0.3048	0.3207	1B	0.3028	0.3304	1C	0.3115	0.3391	1D	0.3130	0.3290
	0.3130	0.3290		0.3115	0.3391		0.3205	0.3481		0.3213	0.3373
	0.3144	0.3186		0.3130	0.3290		0.3213	0.3373		0.3221	0.3261
	0.3068	0.3113		0.3048	0.3207		0.3130	0.3290		0.3144	0.3186
1R	0.3068	0.3113	1S	0.3005	0.3415	1T	0.3099	0.3509	1U	0.3144	0.3186
	0.3144	0.3186		0.3099	0.3509		0.3196	0.3602		0.3221	0.3261
	0.3161	0.3059		0.3115	0.3391		0.3205	0.3481		0.3231	0.3120
	0.3093	0.2993		0.3028	0.3304		0.3115	0.3391		0.3161	0.3059
2A	0.3215	0.3350	2B	0.3207	0.3462	2C	0.3290	0.3538	2D	0.3290	0.3417
	0.3290	0.3417		0.3290	0.3538		0.3376	0.3616		0.3371	0.3490
	0.3290	0.3300		0.3290	0.3417		0.3371	0.3490		0.3366	0.3369
	0.3222	0.3243		0.3215	0.3350		0.3290	0.3417		0.3290	0.3300
2R	0.3222	0.3243	2S	0.3196	0.3602	2T	0.3290	0.3690	2U	0.3290	0.3300
	0.3290	0.3300		0.3290	0.3690		0.3381	0.3762		0.3366	0.3369
	0.3290	0.3180		0.3290	0.3538		0.3376	0.3616		0.3361	0.3245
	0.3231	0.3120		0.3207	0.3462		0.3290	0.3538		0.3290	0.3180
3A	0.3371	0.3490	3B	0.3376	0.3616	3C	0.3463	0.3687	3D	0.3451	0.3554
	0.3451	0.3554		0.3463	0.3687		0.3551	0.3760		0.3533	0.3620
	0.3440	0.3427		0.3451	0.3554		0.3533	0.3620		0.3515	0.3487
	0.3366	0.3369		0.3371	0.3490		0.3451	0.3554		0.3440	0.3427
4A	0.3530	0.3597	4B	0.3548	0.3736	4C	0.3641	0.3804	4D	0.3615	0.3659
	0.3615	0.3659		0.3641	0.3804		0.3736	0.3874		0.3702	0.3722
	0.3590	0.3521		0.3615	0.3659		0.3702	0.3722		0.3670	0.3578
	0.3512	0.3465		0.3530	0.3597		0.3615	0.3659		0.3590	0.3521
5A	0.3702	0.3722	5B	0.3736	0.3874	5C	0.3870	0.3958	5D	0.3825	0.3798
	0.3825	0.3798		0.387	0.3958		0.4006	0.4044		0.3951	0.3876
	0.3783	0.3646		0.3825	0.3798		0.3951	0.3876		0.3898	0.3716
	0.367	0.3578		0.3702	0.3722		0.3825	0.3798		0.3783	0.3646

© 2016-2021 Cree LED. The information in this document is subject to change without notice. Cree® and the Cree logo are registered trademarks, and the Cree LED logo is a trademark, of Cree, Inc. XLamp®, EasyWhite® and SC5 Technology® are registered trademarks of Cree LED. UL® and the UL logo are registered trademarks of UL LLC. Other trademarks, product, and company names are the property of their respective owners and do not imply specific product and/or vendor endorsement, sponsorship or association.

PERFORMANCE GROUPS – CHROMATICITY - CONTINUED

Region	x	y	Region	x	y	Region	x	y	Region	x	y
6A	0.3941	0.3848	6B	0.3996	0.4015	6C	0.4146	0.4089	6D	0.4080	0.3916
	0.4080	0.3916		0.4146	0.4089		0.4299	0.4165		0.4221	0.3985
	0.4017	0.3752		0.4080	0.3916		0.4221	0.3985		0.4147	0.3814
	0.3889	0.3690		0.3941	0.3848		0.4080	0.3916		0.4017	0.3752
7A	0.4221	0.3985	7B	0.4299	0.4165	7C	0.4430	0.4212	7D	0.4342	0.4028
	0.4342	0.4028		0.4430	0.4212		0.4562	0.4260		0.4465	0.4071
	0.4260	0.3853		0.4342	0.4028		0.4465	0.4071		0.4373	0.3893
	0.4147	0.3814		0.4221	0.3985		0.4342	0.4028		0.4260	0.3853
8A	0.4465	0.4071	8B	0.4562	0.4260	8C	0.4687	0.4289	8D	0.4582	0.4099
	0.4582	0.4099		0.4687	0.4289		0.4813	0.4319		0.4700	0.4126
	0.4483	0.3918		0.4582	0.4099		0.4700	0.4126		0.4593	0.3944
	0.4373	0.3893		0.4465	0.4071		0.4582	0.4099		0.4483	0.3918

EasyWhite Color Temperatures – 2-Step			
Bin Code	CCT	x	y
40H	4000 K	0.3777	0.3739
		0.3797	0.3816
		0.3861	0.3855
		0.3838	0.3777
35H	3500 K	0.4022	0.3858
		0.4053	0.3942
		0.4125	0.3977
		0.4091	0.3891
30H	3000 K	0.4287	0.3975
		0.4328	0.4064
		0.4390	0.4086
		0.4347	0.3996
27H	2700 K	0.4524	0.4048
		0.4574	0.4140
		0.4633	0.4154
		0.4581	0.4062

© 2016-2021 Cree LED. The information in this document is subject to change without notice. Cree® and the Cree logo are registered trademarks, and the Cree LED logo is a trademark, of Cree, Inc. XLamp®, EasyWhite® and SC5 Technology® are registered trademarks of Cree LED. UL® and the UL logo are registered trademarks of UL LLC. Other trademarks, product, and company names are the property of their respective owners and do not imply specific product and/or vendor endorsement, sponsorship or association.

PERFORMANCE GROUPS – CHROMATICITY (CONTINUED)

EasyWhite Color Temperatures – 3-Step Ellipse						
Bin Code	CCT	Center Point		Major Axis	Minor Axis	Rotation Angle (°)
		x	y	a	b	
50G	5000 K	0.3447	0.3553	0.00840	0.00312	65.0
45G	4500 K	0.3611	0.3658	0.00852	0.00330	61.5
40G	4000 K	0.3818	0.3797	0.00939	0.00402	53.7
35G	3500 K	0.4073	0.3917	0.00927	0.00414	54.0
30G	3000 K	0.4338	0.4030	0.00834	0.00408	53.2
27G	2700 K	0.4577	0.4099	0.00834	0.00420	48.5

EasyWhite Color Temperatures – 5-Step Ellipse						
Bin Code	CCT	Center Point		Major Axis	Minor Axis	Rotation Angle (°)
		x	y	a	b	
50E	5000 K	0.3447	0.3553	0.01400	0.00520	65.0
45E	4500 K	0.3611	0.3658	0.01420	0.00550	61.5
40E	4000 K	0.3818	0.3797	0.01565	0.00670	53.7
35E	3500 K	0.4073	0.3917	0.01545	0.00690	54.0
30E	3000 K	0.4338	0.4030	0.01390	0.00680	53.2

EASYWHITE® KITS PLOTTED ON ANSI STANDARD CHROMATICITY REGIONS

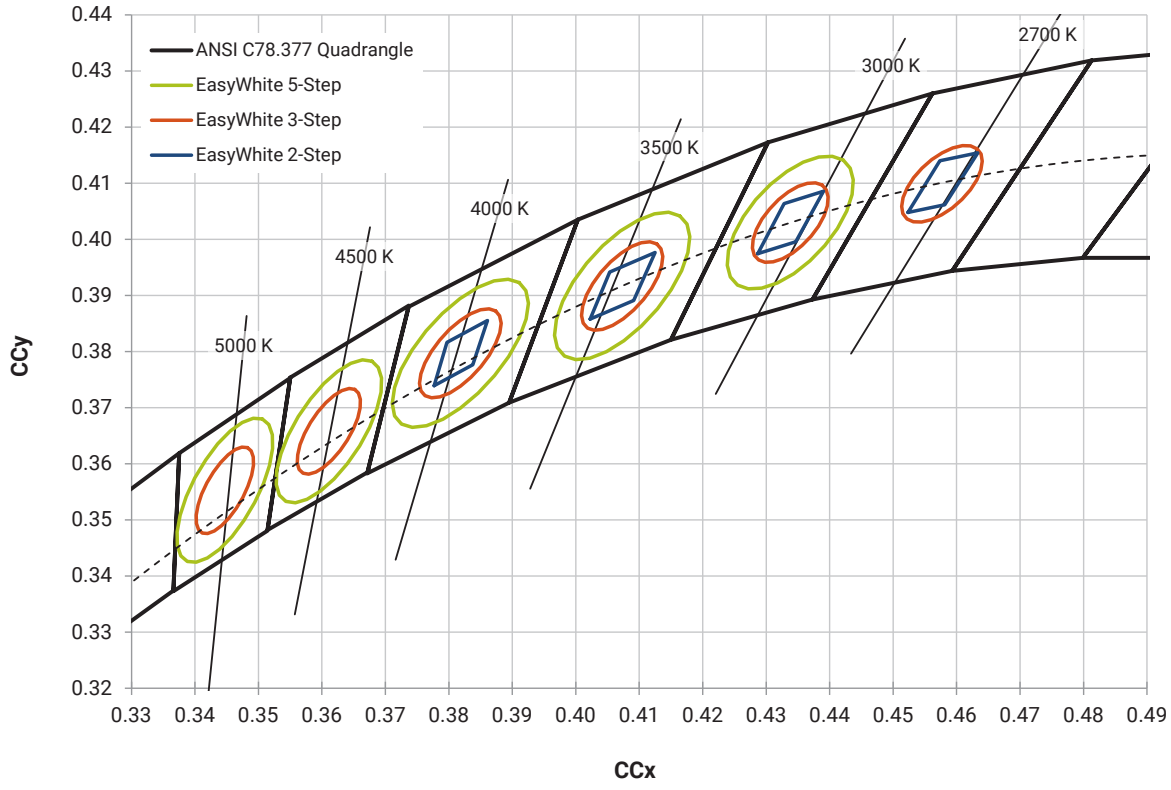

© 2016-2021 Cree LED. The information in this document is subject to change without notice. Cree® and the Cree logo are registered trademarks, and the Cree LED logo is a trademark, of Cree, Inc. XLamp®, EasyWhite® and SC5 Technology® are registered trademarks of Cree LED. UL® and the UL logo are registered trademarks of UL LLC. Other trademarks, product, and company names are the property of their respective owners and do not imply specific product and/or vendor endorsement, sponsorship or association.

ANSI KITS PLOTTED ON ANSI STANDARD CHROMATICITY REGIONS

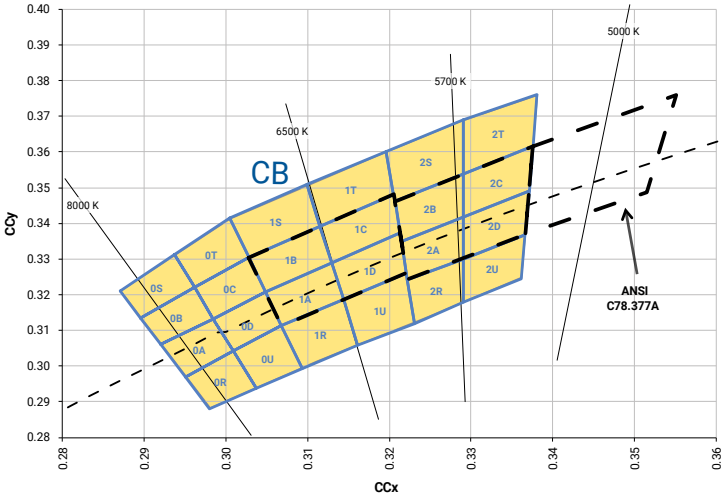

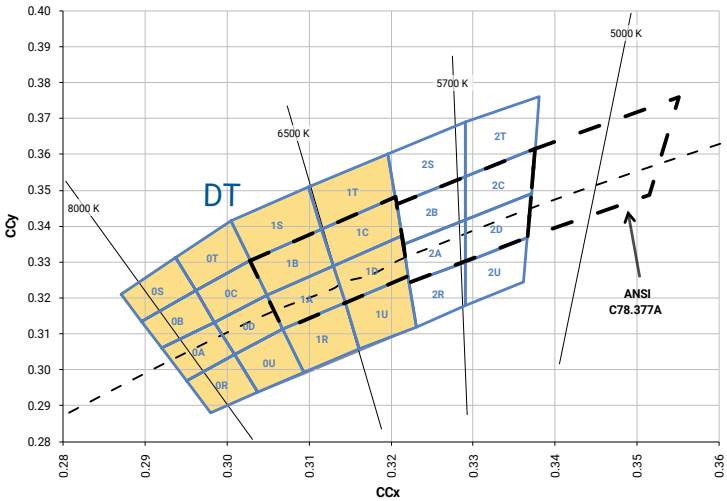

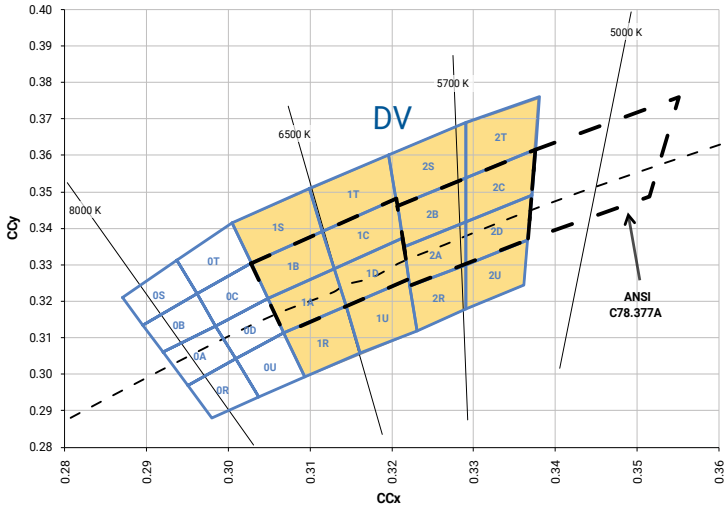

© 2016-2021 Cree LED. The information in this document is subject to change without notice. Cree® and the Cree logo are registered trademarks, and the Cree LED logo is a trademark, of Cree, Inc. XLamp®, EasyWhite® and SC5 Technology® are registered trademarks of Cree LED. UL® and the UL logo are registered trademarks of UL LLC. Other trademarks, product, and company names are the property of their respective owners and do not imply specific product and/or vendor endorsement, sponsorship or association.

ANSI KITS PLOTTED ON ANSI STANDARD CHROMATICITY REGIONS - CONTINUED

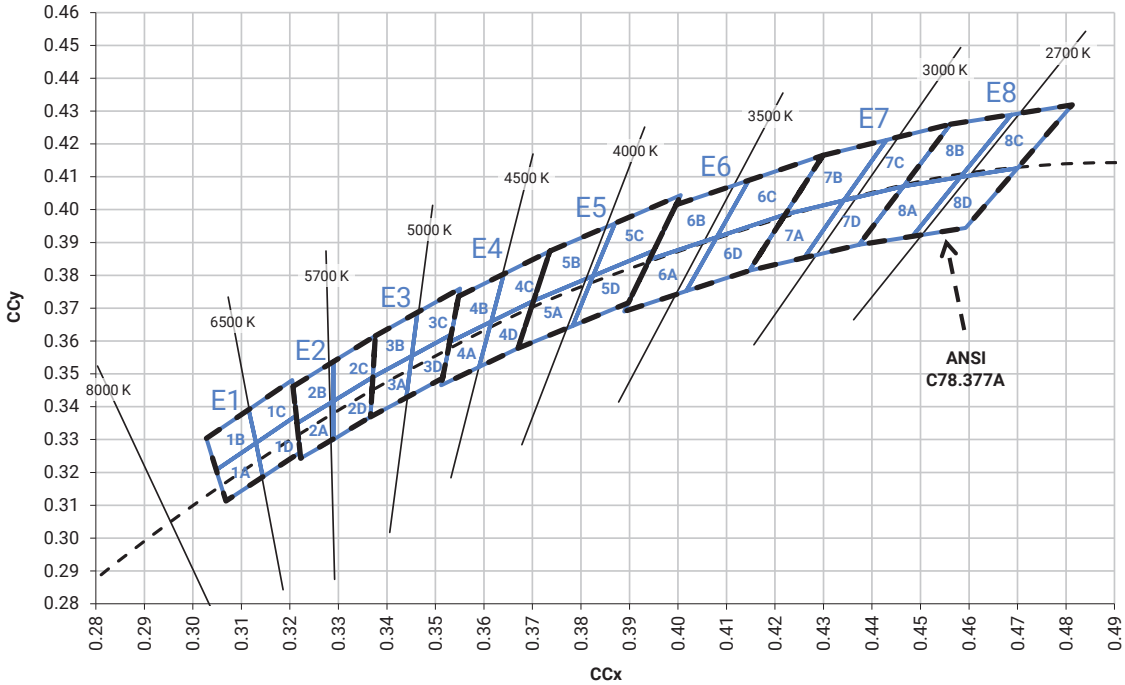

© 2016-2021 Cree LED. The information in this document is subject to change without notice. Cree® and the Cree logo are registered trademarks, and the Cree LED logo is a trademark, of Cree, Inc. XLamp®, EasyWhite® and SC5 Technology® are registered trademarks of Cree LED. UL® and the UL logo are registered trademarks of UL LLC. Other trademarks, product, and company names are the property of their respective owners and do not imply specific product and/or vendor endorsement, sponsorship or association.

STANDARD CHROMATICITY KITS

The following table provides the chromaticity bins associated with chromaticity kits.

Color	CCT	Kit	Chromaticity Bins
Cool White	7000 K	DT	0A, 0B, 0C, 0D, 0R, 0S, 0T, 0U, 1A, 1B, 1C, 1D, 1R, 1S, 1T, 1U
	6500 K	CB	0A, 0B, 0C, 0D, 0R, 0S, 0T, 0U, 1A, 1B, 1C, 1D, 1R, 1S, 1T, 1U, 2A, 2B, 2C, 2D, 2R, 2S, 2T, 2U
	6500 K	E1	1A, 1B, 1C, 1D
	5700 K	DV	1A, 1B, 1C, 1D, 1R, 1S, 1T, 1U, 2A, 2B, 2C, 2D, 2R, 2S, 2T, 2U
	5700 K	E2	2A, 2B, 2C, 2D
Neutral White	5000 K	E3	3A, 3B, 3C, 3D
	4500 K	E4	4A, 4B, 4C, 4D
	4000 K	E5	5A, 5B, 5C, 5D
Warm White	3500 K	E6	6A, 6B, 6C, 6D
	3000 K	E7	7A, 7B, 7C, 7D
	2700 K	E8	8A, 8B, 8C, 8D

BIN AND ORDER CODE FORMATS

XP-L2 bin codes and order codes are configured in the following manner:

Order Code

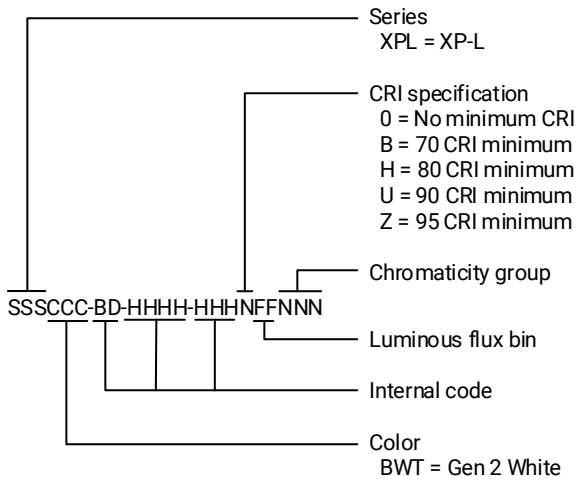

Bin Code

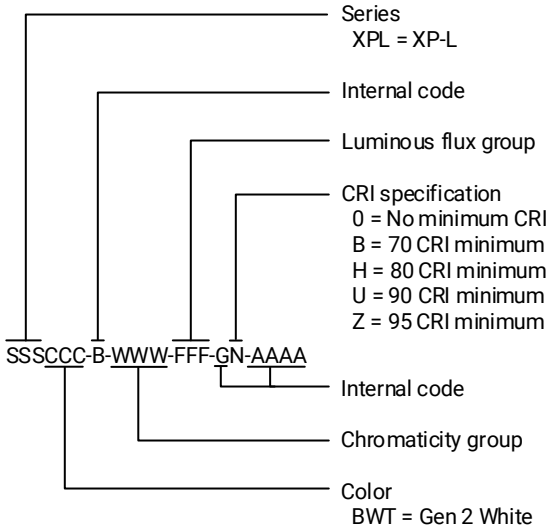

© 2016-2021 Cree LED. The information in this document is subject to change without notice. Cree® and the Cree logo are registered trademarks, and the Cree LED logo is a trademark, of Cree, Inc. XLamp®, EasyWhite® and SC5 Technology® are registered trademarks of Cree LED. UL® and the UL logo are registered trademarks of UL LLC. Other trademarks, product, and company names are the property of their respective owners and do not imply specific product and/or vendor endorsement, sponsorship or association.

REFLOW SOLDERING CHARACTERISTICS

In testing, Cree LED has found XLamp XP-L2 LEDs to be compatible with JEDEC J-STD-020C, using the parameters listed below. As a general guideline, Cree LED recommends that users follow the recommended soldering profile provided by the manufacturer of the solder paste used, and therefore it is the lamp or luminaire manufacturer's responsibility to determine applicable soldering requirements.

Note that this general guideline may not apply to all PCB designs and configurations of reflow soldering equipment.

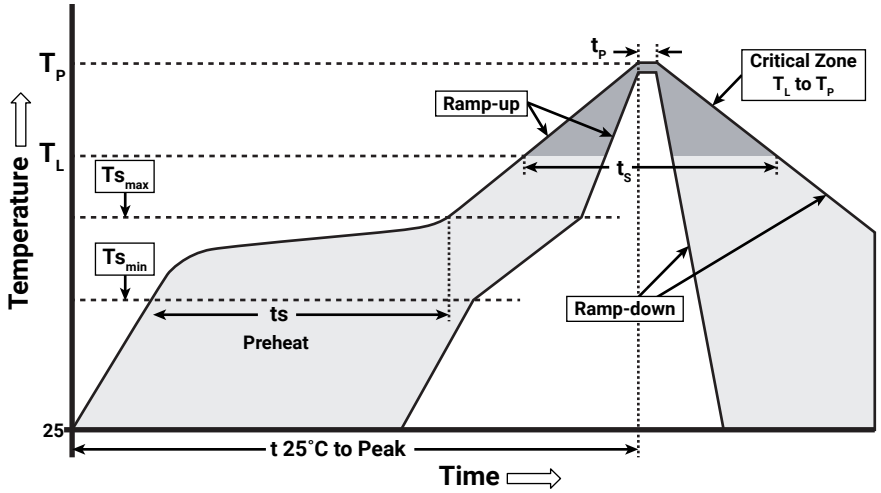

IPC/JEDEC J-STD-020C

Profile Feature	Lead-Free Solder
Average Ramp-Up Rate (Ts_{max} to Tp)	1.2 °C/second
Preheat: Temperature Min (Ts_{min})	120 °C
Preheat: Temperature Max (Ts_{max})	170 °C
Preheat: Time (Ts_{min} to Ts_{max})	65-150 seconds
Time Maintained Above: Temperature (T_L)	217 °C
Time Maintained Above: Time (t_L)	45-90 seconds
Peak/Classification Temperature (Tp)	235 - 245 °C
Time Within 5 °C of Actual Peak Temperature (tp)	20-40 seconds
Ramp-Down Rate	1 - 6 °C/second
Time 25 °C to Peak Temperature	4 minutes max.

Note: All temperatures refer to the topside of the package, measured on the package body surface.

© 2016-2021 Cree LED. The information in this document is subject to change without notice. Cree® and the Cree logo are registered trademarks, and the Cree LED logo is a trademark, of Cree, Inc. XLamp®, EasyWhite® and SC5 Technology® are registered trademarks of Cree LED. UL® and the UL logo are registered trademarks of UL LLC. Other trademarks, product, and company names are the property of their respective owners and do not imply specific product and/or vendor endorsement, sponsorship or association.

NOTES

Measurements

The luminous flux, radiant power, chromaticity, forward voltage and CRI measurements in this document are binning specifications only and solely represent product measurements as of the date of shipment. These measurements will change over time based on a number of factors that are not within Cree LED's control and are not intended or provided as operational specifications for the products. Calculated values are provided for informational purposes only and are not intended or provided as specifications.

Pre-Release Qualification Testing

Please read the LED Reliability Overview for details of the qualification process Cree LED applies to ensure long-term reliability for XLamp LEDs and details of Cree LED's pre-release qualification testing for XLamp LEDs.

Lumen Maintenance

Cree LED now uses standardized IES LM-80-08 and TM-21-11 methods for collecting long-term data and extrapolating LED lumen maintenance. For information on the specific LM-80 data sets available for this LED, refer to the public LM-80 results document.

Please read the Long-Term Lumen Maintenance application note for more details on Cree LED's lumen maintenance testing and forecasting. Please read the Thermal Management application note for details on how thermal design, ambient temperature, and drive current affect the LED junction temperature.

Moisture Sensitivity

Cree LED recommends keeping XLamp LEDs in the provided, resealable moisture-barrier packaging (MBP) until immediately prior to soldering. Unopened MBPs that contain XLamp LEDs do not need special storage for moisture sensitivity.

Once the MBP is opened, XLamp XP-L2 LEDs may be stored as MSL 1 per JEDEC J-STD-033, meaning they have unlimited floor life in conditions of ≤ 30 °C/85% relative humidity (RH). Regardless of the storage condition, Cree LED recommends sealing any unsoldered LEDs in the original MBP.

RoHS Compliance

The levels of RoHS restricted materials in this product are below the maximum concentration values (also referred to as the threshold limits) permitted for such substances, or are used in an exempted application, in accordance with EU Directive 2011/65/EC (RoHS2), as implemented January 2, 2013. RoHS Declarations for this product can be obtained from your Cree LED representative or from the Product Ecology section of the Cree LED website.

REACh Compliance

REACh substances of very high concern (SVHCs) information is available for this product. Since the European Chemical Agency (ECHA) has published notice of their intent to frequently revise the SVHC listing for the foreseeable future, please contact a Cree LED representative to insure you get the most up-to-date REACh Declaration. REACh banned substance information (REACh Article 67) is also available upon request.

© 2016-2021 Cree LED. The information in this document is subject to change without notice. Cree® and the Cree logo are registered trademarks, and the Cree LED logo is a trademark, of Cree, Inc. XLamp®, EasyWhite® and SC5 Technology® are registered trademarks of Cree LED. UL® and the UL logo are registered trademarks of UL LLC. Other trademarks, product, and company names are the property of their respective owners and do not imply specific product and/or vendor endorsement, sponsorship or association.

NOTES - CONTINUED

UL® Recognized Component

This product meets the requirements to be considered a UL Recognized Component with Level 4 enclosure consideration. The LED package or a portion thereof has been investigated as a fire and electrical enclosure per ANSI/UL 8750.

Vision Advisory

WARNING: Do not look at an exposed lamp in operation. Eye injury can result. For more information about LEDs and eye safety, please refer to the LED Eye Safety application note.

© 2016-2021 Cree LED. The information in this document is subject to change without notice. Cree® and the Cree logo are registered trademarks, and the Cree LED logo is a trademark, of Cree, Inc. XLamp®, EasyWhite® and SC5 Technology® are registered trademarks of Cree LED. UL® and the UL logo are registered trademarks of UL LLC. Other trademarks, product, and company names are the property of their respective owners and do not imply specific product and/or vendor endorsement, sponsorship or association.

MECHANICAL DIMENSIONS

All measurements are ±.13 mm unless otherwise indicated.

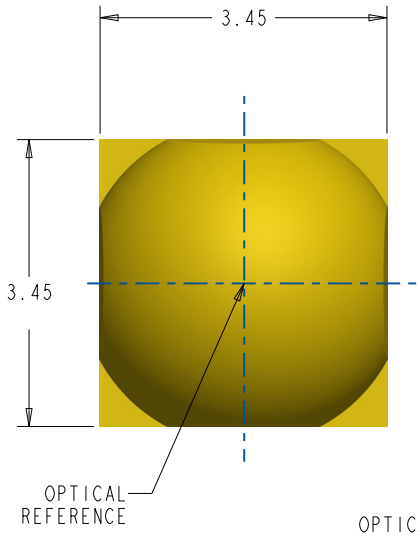

Top View

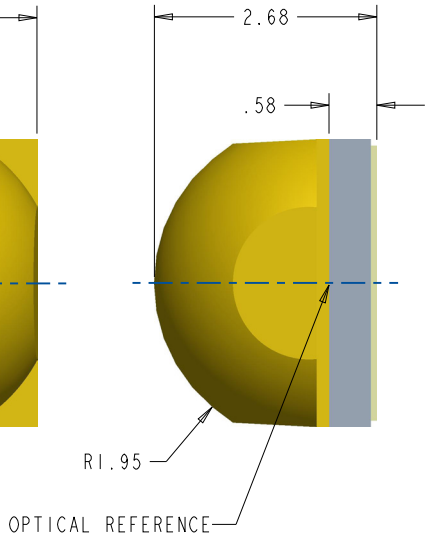

Side View

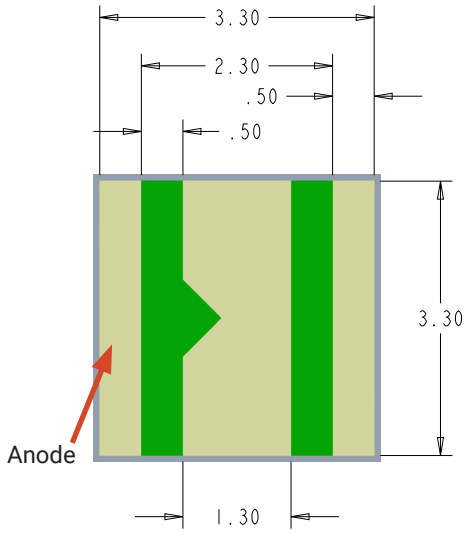

Bottom View

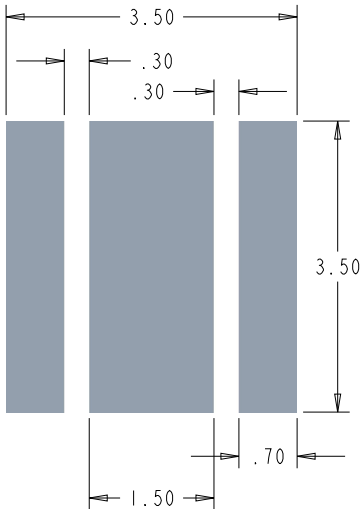

Recommended Copper Layout

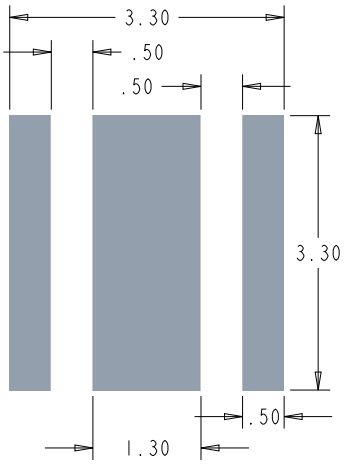

Recommended Solder Pad (Solder Mask Pattern)

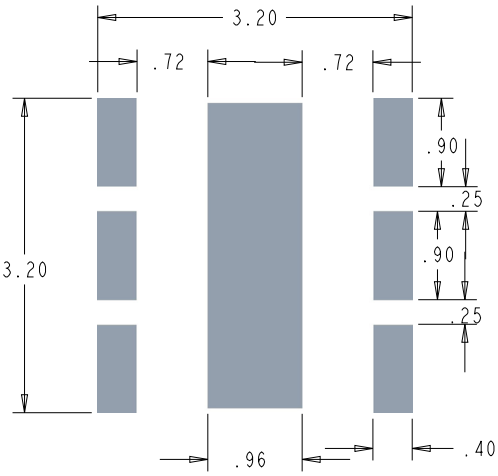

Recommended Stencil Openings*

Notes:

- Cree LED recommends using thermal pad kickouts to maximize component thermal performance.
- Cree LED recommends using white solder mask material to minimize system optical loss.

* This stencil has been tested and optimized for the avoidance of voiding when using ALPHA® LUMET® P30 Maxrel solder paste. For other solder pastes, a “window pane” design for the thermal pad stencil may result in a lower voiding percentage. Contact your local Cree LED Field Applications Engineer for consultation regarding your specific application.

© 2016-2021 Cree LED. The information in this document is subject to change without notice. Cree® and the Cree logo are registered trademarks, and the Cree LED logo is a trademark, of Cree, Inc. XLamp®, EasyWhite® and SC5 Technology® are registered trademarks of Cree LED. UL® and the UL logo are registered trademarks of UL LLC. Other trademarks, product, and company names are the property of their respective owners and do not imply specific product and/or vendor endorsement, sponsorship or association.

TAPE AND REEL

All Cree LED carrier tapes conform to EIA-481D, Automated Component Handling Systems Standard.

Except as noted, all dimensions in mm [inches]

POCKET SIZE	
Ao -	3.60 mm [.142"]
Bo -	3.60 mm [.142"]
Ko -	3.00 mm [.118"]

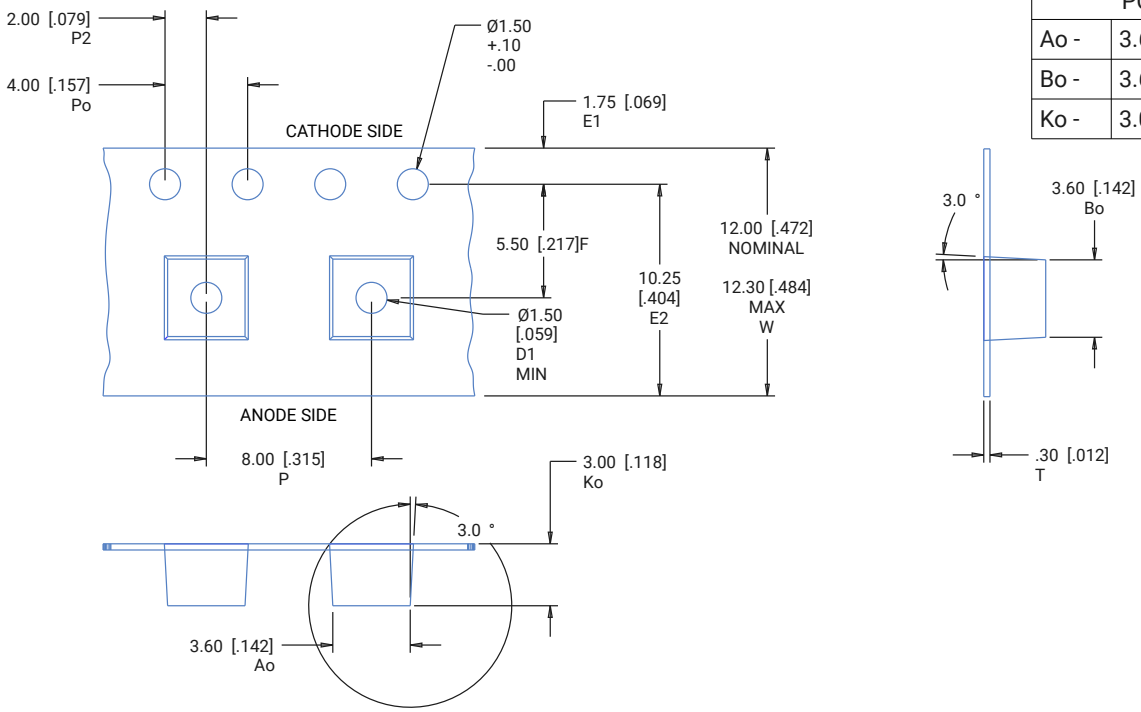

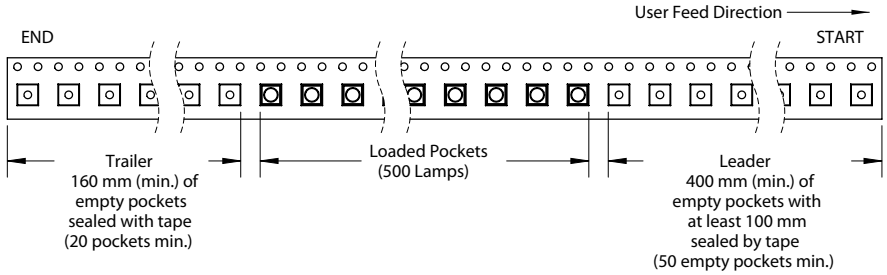

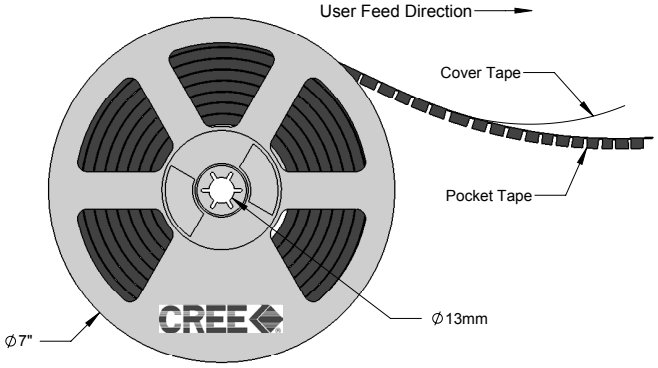

© 2016-2021 Cree LED. The information in this document is subject to change without notice. Cree® and the Cree logo are registered trademarks, and the Cree LED logo is a trademark, of Cree, Inc. XLamp®, EasyWhite® and SC5 Technology® are registered trademarks of Cree LED. UL® and the UL logo are registered trademarks of UL LLC. Other trademarks, product, and company names are the property of their respective owners and do not imply specific product and/or vendor endorsement, sponsorship or association.

PACKAGING

Unpackaged Reel

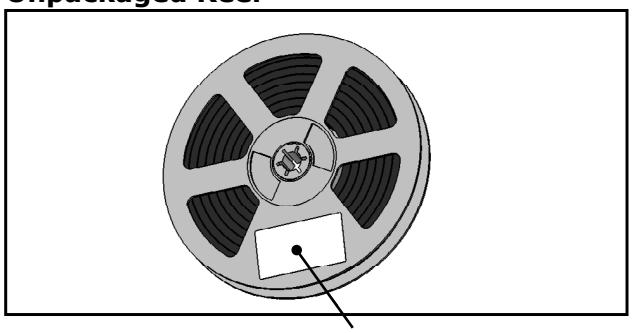

Label with Cree Bin Code,
Quantity, Reel ID

Packaged Reel

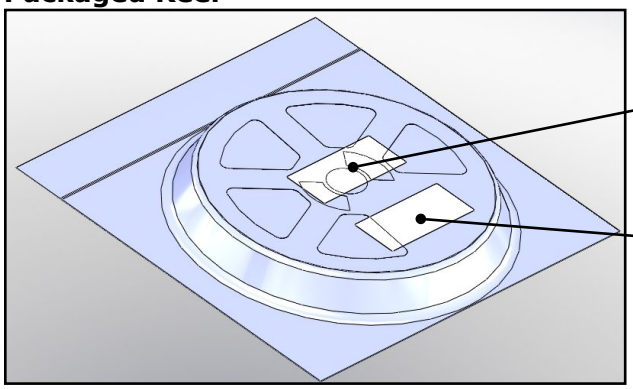

Label with Cree Order Code,
Quantity, Reel ID, PO #

Label with Cree Bin Code,
Quantity, Reel ID

Boxed Reel

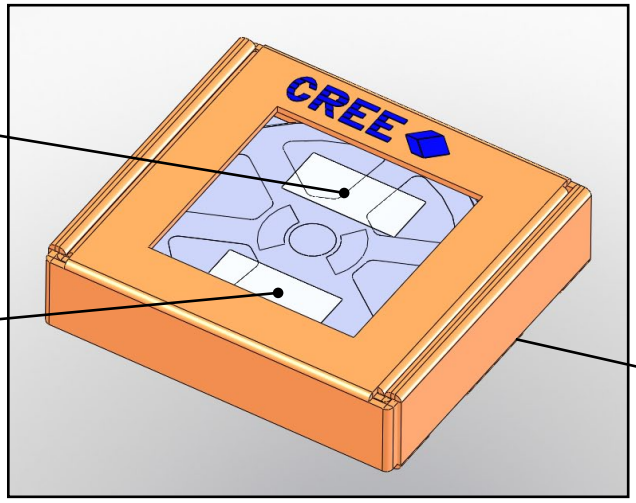

Label with Cree Order Code,
Quantity, Reel ID, PO #

Label with Cree Bin Code,
Quantity, Reel ID

Patent Label
(on bottom of box)

© 2016-2021 Cree LED. The information in this document is subject to change without notice. Cree® and the Cree logo are registered trademarks, and the Cree LED logo is a trademark, of Cree, Inc. XLamp®, EasyWhite® and SC5 Technology® are registered trademarks of Cree LED. UL® and the UL logo are registered trademarks of UL LLC. Other trademarks, product, and company names are the property of their respective owners and do not imply specific product and/or vendor endorsement, sponsorship or association.